JVC

SERVICE MANUAL

REAR PROJECTION TELEVISION

BASIC CHASSIS
SB2

AV-56WP30

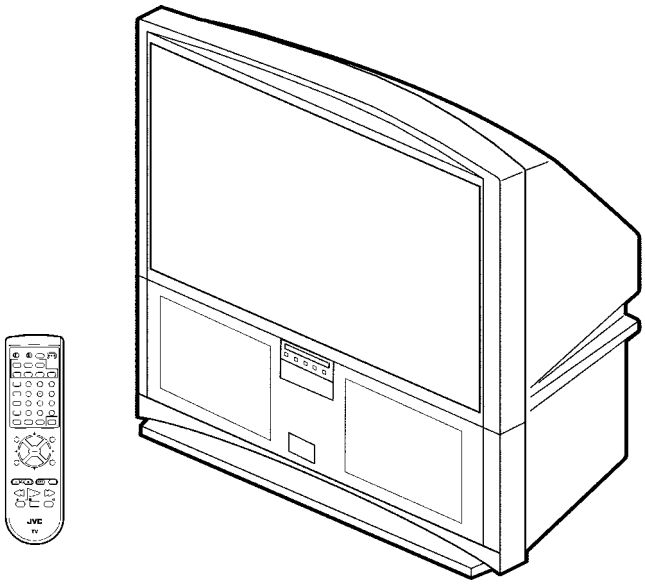

CONTENTS

- SPECIFICATIONS ····· 2
- SAFETY PRECAUTIONS ····· 3
- FEATURES ····· 4
- FUNCTIONS ····· 4
- INSTALLATION ····· 7
- TECHNICAL INFORMATION ····· 8
- MAIN PARTS LOCATION ····· 9
- SPECIFIC SERVICE INSTRUCTIONS ··· 10
- SERVICE ADJUSTMENTS ····· 19
- TROUBLESHOOTING ····· 51
- PARTS LIST ····· 53
- ★ OPERATING INSTRUCTIONS
- ★ STANDARD CIRCUIT DIAGRAM ····· 2-1

COPYRIGHT © 2002 VICTOR COMPANY OF JAPAN, LTD.

No.52007
Jun. 2002

SPECIFICATIONS

Items	Contents
Dimensions (W× H× D)	136.8cm× 138.6cm × 66.7cm (53-7/8”× 54-5/8” × 26-3/4”)
Mass	95.0 kg (209.0 lbs)
TV RF System	CCIR (M)
Color System	NTSC
Sound System	BTSC System (Multi Channel Sound)
TV Receiving Channels and Frequency	
VL Band	(02～06) 54MHz～88MHz
VH Band	(07～13) 174MHz～ 216MHz
UHF Band	(14～69) 470MHz～ 806MHz
CATV Receiving Channels and Frequency	
Low Band	(02～06, A-8) by (02～06&01)
High Band	(07～13) by (07～13)
Mid Band	(A～1) by (14～22)
Super Band	(J～W) by (23～36) (54MHz～804MHz)
Hyper Band	(W +1～W+28) by (37～64)
Ultra Band	(W +29～W+84) by (65～125)
Sub Mid Band	(A8, A4～A1) by (01, 96～99)
TV/CATV Total Channel	180 Channels
Antenna Terminal	75Ω (VHF/UHF) F-type connector
Intermediate Frequency	
Video IF Carrier	45.75MHz
Sound IF Carrier	41.25MHz (4.5MHz)
Color Sub Carrier	3.58MHz
Power Input	120V AC, 60Hz
Power Consumption	225.8W (Max) : 0.6W (Stand by)
Screen	Transparent screen (unitized fresnel lens / double lenticular lens)
Screen Size	56” (142cm) Measured diagonally, 16:9 ratio (W :124.0cm, H:69.8cm)
Projection Tube	17cm (6.7”) tube ×3 (R / G / B)
High Voltage	31kV ±1.0kV (at zero beam current)
Speaker	φ16cm round ×2, φ5.5cm round ×2
Audio Power Output	10W+10W
External Input	
Video Input	1Vp-p, 75Ω (RCA pin jack ×4)
Audio Input	500mVrms (-4dBs), high impedance (RCA pin jack ×8)
S-Video	Y: 1Vp-p positive (negative sync provided, when terminated with 75Ω) C: 0.286Vp-p (burst signal, when terminated with 75Ω) Mini-DIN 4pin connector ×2
Component Input	PB: ±0.35Vp-p, 75Ω (RCA pin jack ×2) PR: ±0.35Vp-p, 75Ω (RCA pin jack ×2) Y: 1Vp-p, 75Ω (RCA pin jack ×2) 1080i DTV (digital broadcast) ready
Audio Output	Fix : 500mVrms (-4dBs) low impedance (1kHz when modulated 100%)
Digital-Input	DVI-D signal link 19pin connector (Digital-input terminal is not compatible with computer signal.)
Speaker Input	45W 16Ω (maximum input)
AV Compulink Ⅲ	φ3.5mm mini jack
Remote Control Unit	RM-C322G (AA/R6/UM-3 battery ×2)

Design & specifications are subject to change without notice.

SAFETY PRECAUTIONS

1. The design of this product contains special hardware, many circuits and components specially for safety purposes. For continued protection, no changes should be made to the original design unless authorized in writing by the manufacturer. Replacement parts must be identical to those used in the original circuits. Service should be performed by qualified personnel only.
2. Alterations of the design or circuitry of the products should not be made. Any design alterations or additions will void the manufacturer's warranty and will further relieve the manufacturer of responsibility for personal injury or property damage resulting therefrom.
3. Many electrical and mechanical parts in the products have special safety-related characteristics. These characteristics are often not evident from visual inspection nor can the protection afforded by them necessarily be obtained by using replacement components rated for higher voltage, wattage, etc. Replacement parts that have these special safety characteristics are identified in the parts list of Service manual. **Electrical components having such features are identified by shading on the schematics and by (⚠) on the parts list in Service manual.** The use of a substitute replacement which does not have the same safety characteristics as the recommended replacement part shown in the parts list of Service manual may cause shock, fire, or other hazards.
4. **Use isolation transformer when hot chassis.**
   The chassis and any sub-chassis contained in some products are connected to one side of the AC power line. An isolation transformer of adequate capacity should be inserted between the product and the AC power supply point while performing any service on some products when the HOT chassis is exposed.
5. **Don't short between the LIVE side ground and ISOLATED (NEUTRAL) side ground or EARTH side ground when repairing.**
   Some model's power circuit is partly different in the GND. The difference of the GND is shown by the LIVE : (⊥) side GND, the ISOLATED(NEUTRAL) : (⏚) side GND and EARTH : (⏚) side GND. Don't short between the LIVE side GND and ISOLATED(NEUTRAL) side GND or EARTH side GND and never measure with a measuring apparatus (oscilloscope etc.) the LIVE side GND and ISOLATED(NEUTRAL) side GND or EARTH side GND at the same time.
   If above note will not be kept, a fuse or any parts will be broken.
6. If any repair has been made to the chassis, it is recommended that the B1 setting should be checked or adjusted (See ADJUSTMENT OF B1 POWER SUPPLY).
7. The high voltage applied to the picture tube must conform with that specified in Service manual. Excessive high voltage can cause an increase in X-Ray emission, arcing and possible component damage, therefore operation under excessive high voltage conditions should be kept to a minimum, or should be prevented. If severe arcing occurs, remove the AC power immediately and determine the cause by visual inspection (incorrect installation, cracked or melted high voltage harness, poor soldering, etc.). To maintain the proper minimum level of soft X-Ray emission, components in the high voltage circuitry including the picture tube must be the exact replacements or alternatives approved by the manufacturer of the complete product.
8. Do not check high voltage by drawing an arc. Use a high voltage meter or a high voltage probe with a VTVM. Discharge the picture tube before attempting meter connection, by connecting a clip lead to the ground frame and connecting the other end of the lead through a 10kΩ 2W resistor to the anode button.
9. When service is required, observe the original lead dress. Extra precaution should be given to assure correct lead dress in the high voltage circuit area. Where a short circuit has occurred, those components that indicate evidence of overheating should be replaced. Always use the manufacturer's replacement components.
10. **Isolation Check**
    (Safety for Electrical Shock Hazard)
    After re-assembling the product, always perform an isolation check on the exposed metal parts of the cabinet (antenna terminals, video/audio input and output terminals, Control knobs, metal cabinet, screwheads, earphone jack, control shafts, etc.) to be sure the product is safe to operate without danger of electrical shock.

(1) **Dielectric Strength Test**
The isolation between the AC primary circuit and all metal parts exposed to the user, particularly any exposed metal part having a return path to the chassis should withstand a voltage of 1100V AC (r.m.s.) for a period of one second.
(. . . . Withstand a voltage of 1100V AC (r.m.s.) to an appliance rated up to 120V, and 3000V AC (r.m.s.) to an appliance rated 200V or more, for a period of one second.)
This method of test requires test equipment not generally found in the service trade.

(2) **Leakage Current Check**
Plug the AC line cord directly into the AC outlet (do not use a line isolation transformer during this check.). Using a "Leakage Current Tester", measure the leakage current from each exposed metal part of the cabinet, particularly any exposed metal part having a return path to the chassis, to a known good earth ground (water pipe, etc.). Any leakage current must not exceed 0.5mA AC (r.m.s.).
However, in tropical area, this must not exceed 0.2mA AC (r.m.s.).

● **Alternate Check Method**
Plug the AC line cord directly into the AC outlet (do not use a line isolation transformer during this check.). Use an AC voltmeter having 1000 ohms per volt or more sensitivity in the following manner. Connect a 1500Ω 10W resistor paralleled by a 0.15μF AC-type capacitor between an exposed metal part and a known good earth ground (water pipe, etc.). Measure the AC voltage across the resistor with the AC voltmeter. Move the resistor connection to each exposed metal part, particularly any exposed metal part having a return path to the chassis, and measure the AC voltage across the resistor. Now, reverse the plug in the AC outlet and repeat each measurement. Any voltage measured must not exceed 0.75V AC (r.m.s.). This corresponds to 0.5mA AC (r.m.s.).
However, in tropical area, this must not exceed 0.3V AC (r.m.s.). This corresponds to 0.2mA AC (r.m.s.).

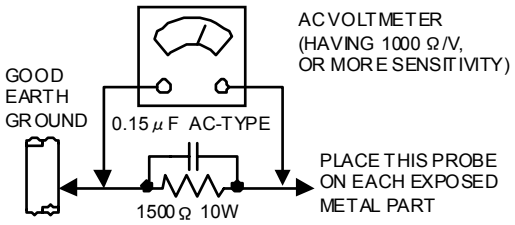

11. **High voltage hold down circuit check.**
    After repair of the high voltage hold down circuit, this circuit shall be checked to operate correctly.
    See item "**How to check the high voltage hold down circuit**".

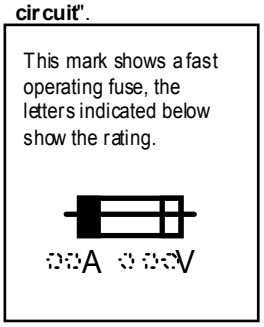

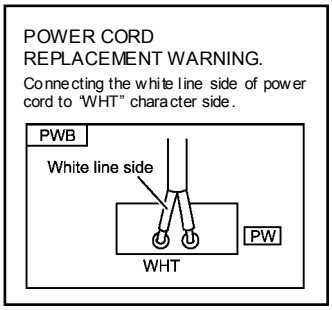

FEATURES

- New chassis design enable use of an interactive on screen control.
- 2-3PULL DOWN : You can enjoy DVD movies at the highest picture quality.
- MOTION COMPENSATION : With this function, the seamless reproduction of dynamic motion on the screen has been realized.
- Bullet-in DSD (Digital Supper Detail) circuit and 3 dimension Y/C separate circuit.
- Receive DTV broadcast (1080i / 720p / 480p / 480i)
- Built-in HDCP / Component (Y / PB / PR)
- Built-in Hyper Sound, BBE circuit.

FUNCTIONS

■ FRONT CONTROL KEY & TERMINAL

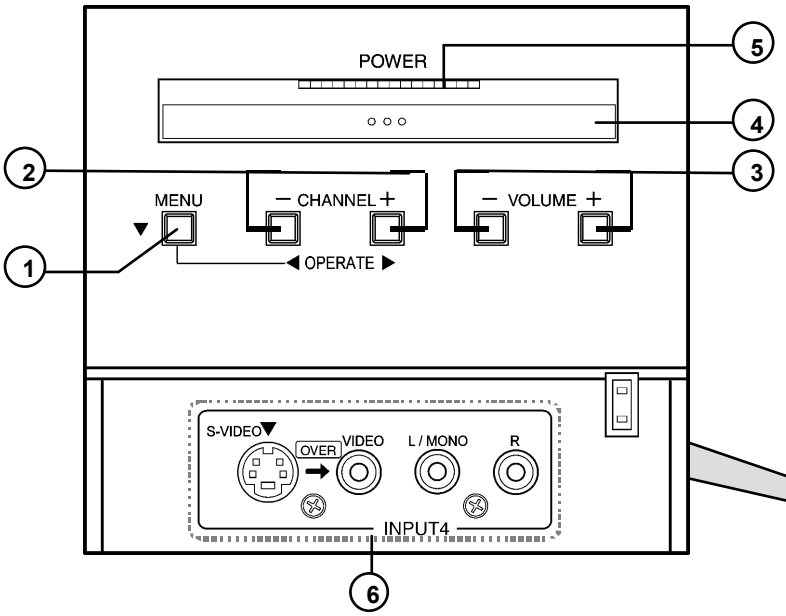

① MENU Button (OPERATE ▼)
② CHANNERL -/+ Button (OPERATE ◀/ ▶)
③ VOLUME -/+ Button
④ MAIN POWER SW Button
⑤ POWER LAMP (Blue)
⑥ INPUT4
(AUDIO / VIDEO / S-VIDEO)

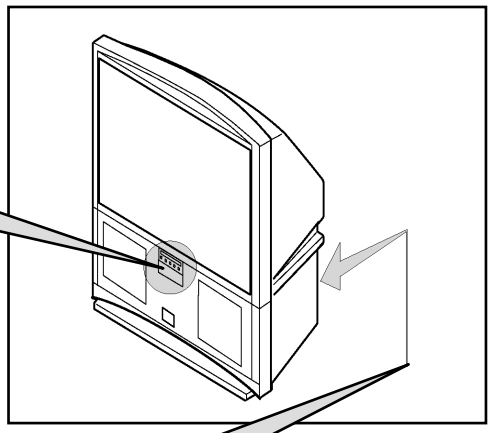

■ REAR TERMINAL

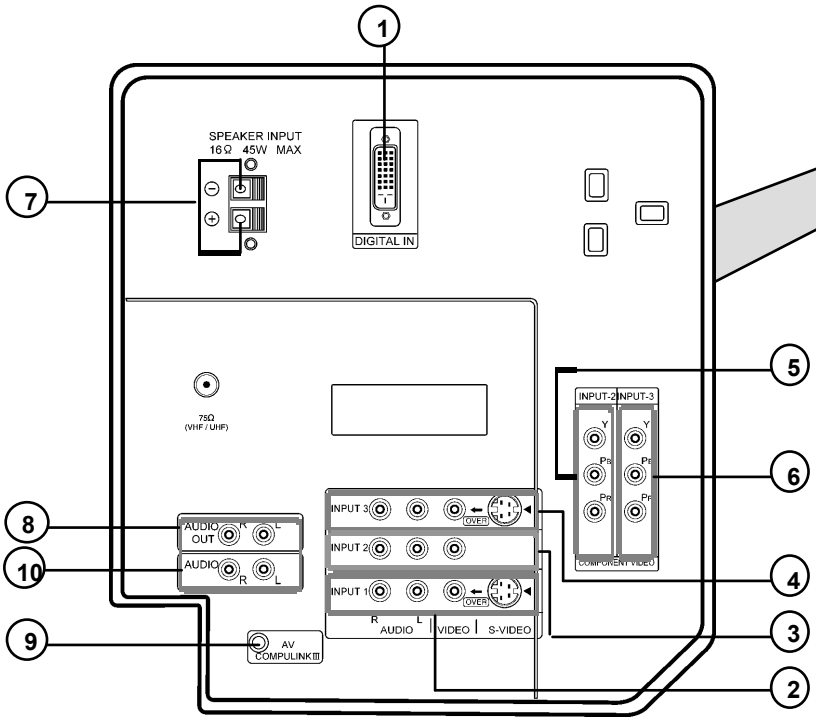

① DIGITAL IN
(DVI-D Signal Link 19pin)
② INPUT 1
(AUDIO / VIDEO / S-VIDEO)
③ INPUT 2
(AUDIO / VIDEO)
④ INPUT 3
(AUDIO / VIDEO / S-VIDEO)
⑤ INPUT 2
(COMPONENT VIDEO)
⑥ INPUT 3
(COMPONENT VIDEO)
⑦ SPEAKER INPUT
⑧ AUDIO OUT
⑨ AV COMPULINK Ⅲ
⑩ AUDIO INPUT (For DIGITAL IN)

■ REMOTE CONTROL UNIT [RM-C322G]

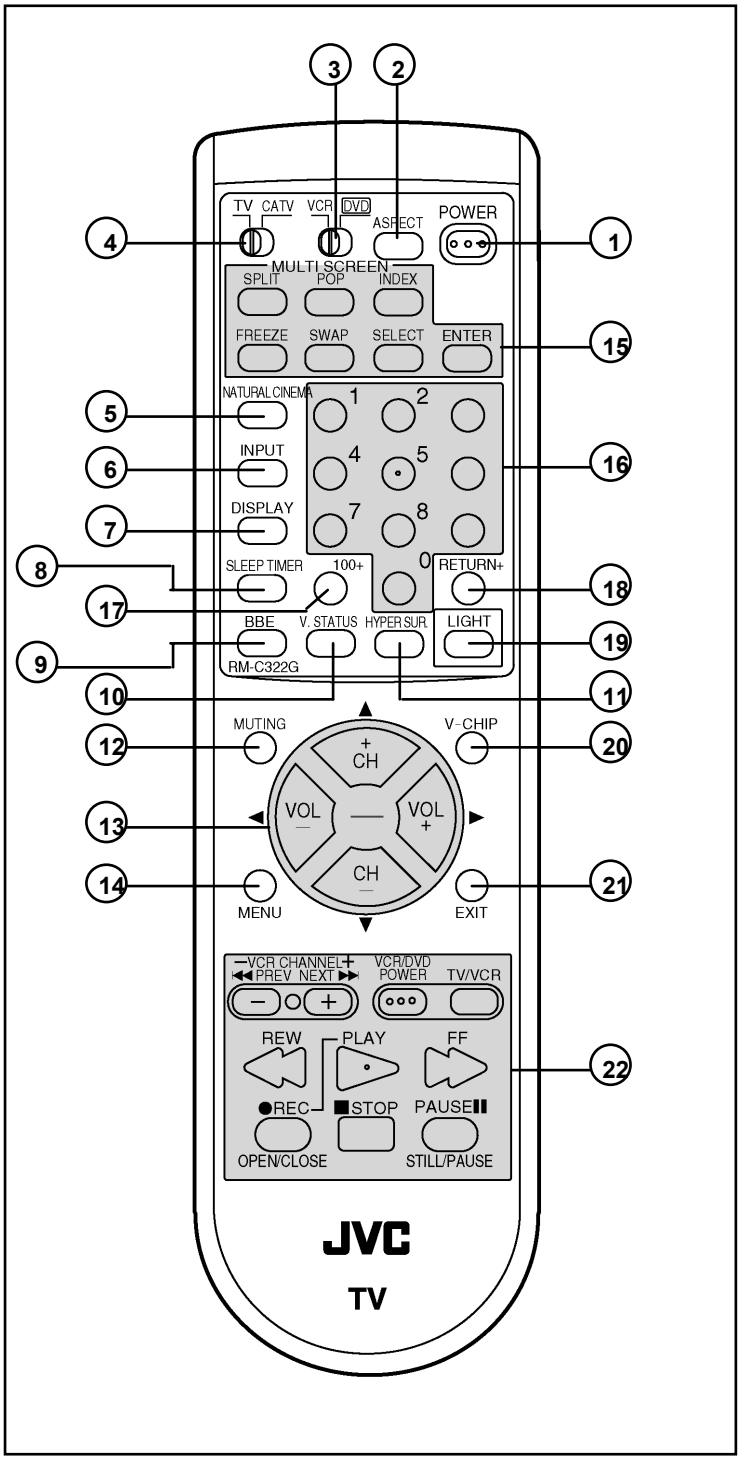

①	POWER Key
②	ASPECT Key
③	VCR / DVD Switch
④	TV / CATV Switch
⑤	NATURAL CINEMA Key
⑥	INPUT Key
⑦	DISPLAY Key
⑧	SLEEP TIMER Key
⑨	BBE Key
⑩	V.STATUS Key
⑪	HYPER SURROUND Key
⑫	MUTING Key (memory Key)
⑬	Function Keys (▲ / ▼ / ▶ /◀)
⑭	MENU Key
⑮	MULTI SCREEN operation Keys
⑯	Number Keys
⑰	100+ Key
⑱	RETURN+ Key
⑲	LIGHT Key
⑳	V-CHIP Key
㉑	EXIT Key
㉒	VCR / DVD operation Keys

■ DIGITAL-IN TERMINAL FUNCTIONS

PIN No.	PIN NAME	PIN No.	PIN NAME
1	RX2-	13	RX3+
2	RX2+	14	5V
3	GND2/ 4	15	GND
4	RX4-	16	HTPLG
5	RX4+	17	RX0-
6	SCL	18	RX0+
7	SDA	19	GND0/5
8	NC	20	RX5-
9	RX1-	21	RX5+
10	RX1+	22	GNDC
11	GND1/3	23	TXC+
12	RX3-	24	TXC-

PIN ASSIGNMENT

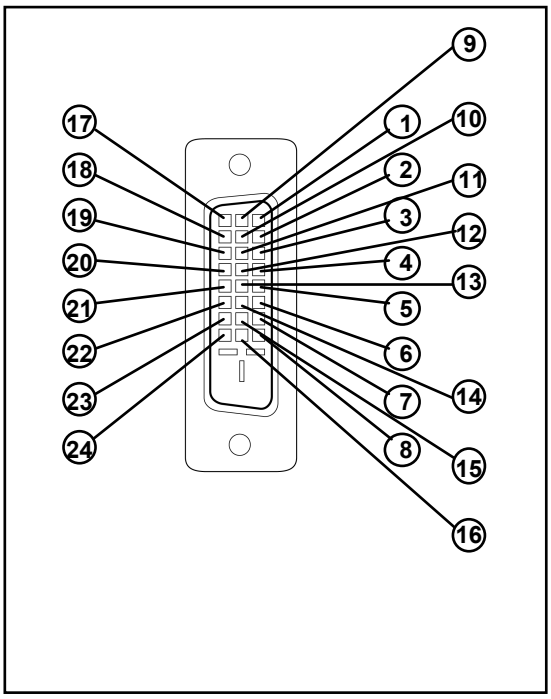

INSTALLATION

1. INSTALLATION SITE

1. The rear of this set is provided with ventilation openings. Install the set more than 5 cm from a wall and in a location with good ventilation.
2. Avoid the following types of locations.
   (1) Unstable locations (location must be able to withstand heavy weight).
   (2) Locations subjected to direct sunlight.
   (3) Near stoves or other heating devices.
   (4) Locations subjected to humidity or oily smoke.
   (5) Dusty locations.
   (6) Locations with strong vibration.

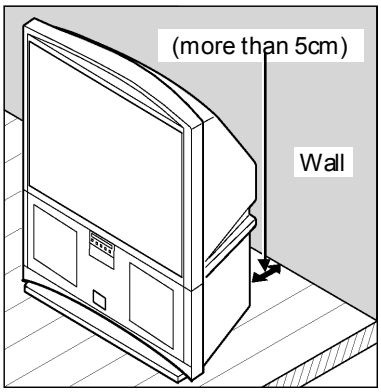

VENTILATION OPENING

2. INSTALLATION ADJUSTMENT

When installing, moving or changing the orientation of the set, perform static convergence adjustment according to the following procedure.

1. Press the MENU key of the remote control unit.
2. Select the "CONVERGENCE" in the INITIAL SETUP menu with Function ▲/▼ key.
3. Press the Function ◀/▶ key, the convergence adjustment screen appears with crosses (+) displayed in 9 locations.
   Locations where the crosses appear in 3 colours:
   Convergence adjustment is required. Perform steps 4 to 5.
   Locations where the crosses are white:
   The convergence is adjusted correctly.
   - If all the crosses are white, no convergence adjustment is needed.
4. The locations of the crosses correspond to the positions of the number keys on the remote control. A box appears around the selected cross.
5. Press the SELECT button to change the color of the box to the color of the cross you want to adjust (red or blue).
   - You cannot adjust the green cross.
6. Use the ▲/▼ and ◀/▶ buttons to adjust the position of the cross.
   - To cancel the adjustments before completing the procedure, press the EXIT button.
7. Press the ENTER button to end the convergence adjustment procedure.
   - If you do not use the TV controls for roughly one minute, the convergence adjustment screen automatically disappears.

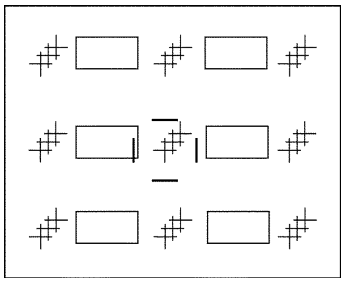

Fig.1

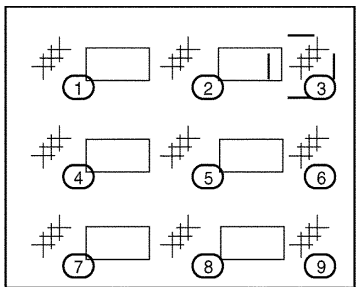

Fig.2

TECHNICAL INFORMATION

■ MAIN MICRO COMPUTER (CPU) FUNCTION

(MIN102H57K)

PIN No.	PIN NAME	I/O	FUNCTION
1	CONV. SW	O	CONVERGENCE SW
2	/VSYNC	I	V.SYNC IN for OSD
3	LB PRO	I	LOW B Protection
4	NC	—	NC
5	/RST	I	Micon Reset input
6	CONV. BUSY	O	CONV.
7	/TEST	I	+3.3V
8	YS	O	OSD YS OUT
9	NC	O	Micon test pin
10	NC	O	NC
11	A_MUTE	O	TV Sound Muting
12	/HSYNC	I	H.sync input for OSD
13	M_MUTE	O	Monitor Out Muting
14	OSDXI	—	————
15	OSDXO	—	————
16	SDA2	O	I²C BUS (SDA) for MTS
17	AC_IN	I	AC 50/60Hz in
18	SCL2	O	I²C BUS (SCL) for MTS
19	TU_POW	O	Tuner Power Control
20	VCOI	I	LPF input
21	PDO	O	LPF output
22	/IP_RESET	O	————
23	YM	O	OSD YM out
24	B	O	OSD Blue out
25	LED_POWER	O	LED for Power
26	G	O	OSD Green Out
27	R	O	OSD Red Out
28	VREF	I	————
29	IP_ERR	I	AMDP program load det.
30	IREF	I	————
31	COMP	I	————
32	AVDD	I	+3.3V
33	CLL	I	For Sub CCD
34	VREFLS	I	STD VOL in for Sub CCD
35	SUB_CCD	I	For Sub CCD
36	NC	—	NC
37	VSS	I	GND
38	MAIN_CCD	I	For main CCD
39	VREFHS	I	STD VOL in for CCD
40	CLH	I	For main CCD
41	VDD	O	+3.3V
42	LED_DATA	O	Front control Data

PIN No.	PIN NAME	I/O	FUNCTION
43	LED_CLOCK	O	F. LED CLK
44	LED_ON_TIMER	O	LED on timer
45	SBO0	—	————
46	SBD0	—	————
47	AP DATA	—	————
48	INC	—	————
49	ECO RST	O	Eco Reset
50	ROT COIL L	O	Picture rotation
51	ROT COIL R	O	Picture rotation
52	H BLK	O	H.BLK
53	SN COIL_R	O	Terrestrial Magnetism Sensor
54	SN COIL_L	O	↑
55	BS POW	O	BS power control
56	I²C STOP	O	I²C BUS STOP
57	NC	—	————
58	/LOB_POW	O	LOB power control
59	COMPULINK	I	AV Compulink III Input
60	/POWERGOOD	I	Power Condition Check
61	/MECA_ON	I	Machine SW Interrupt
62	/MAIN_POW	O	MAIN POWER CONTROL
63	NC	—	NC
64	/B1 POW	O	B1 POWER CONTROL
65	C / N	—	————
66	X-RAY	I	X-ray detection
67	EE CDS	—	————
68	KEY2	I	Front Key input 2
69	KEY1	I	Front Key input 1
70	SCL1	O	I²C BUS (CLK) for E²PROM
71	SDA1	I/O	I²C BUS (SDA) for E²PROM
72	REMO	I	Remocon IN
73	AP REQ	—	————
74	VSS	I	GND
75	OSC2	O	4MHz OSC
76	OSC1	I	4MHz OSC
77	VDD	I	+3.3V
78	SCL0	O	I²C BUS (CLK) for General
79	AP CLK	—	————
80	SDA0	I/O	I²C BUS (SDA) for General
81	NC	—	————
82	NC	—	————
83	NC	—	NC
84	P MUTE	O	Picture muting

MAIN PARTS LOCATION

■ PWB ASS'Y ARRANGEMENT

The PWB ASS'Y is indicated below.

- MAIN PWB ASS'Y (SSB-1053A-M2)
- POWER & DEF PWB ASS'Y (SSB-2053A-M2)
- R CRT SOCKET PWB ASS'Y (SSB-3153A-M2)
- G CRT SOCKET PWB ASS'Y (SSB-3253A-M2)
- B CRT SOCKET PWB ASS'Y (SSB-3353A-M2)
- R VM PWB ASS'Y (SSB-7153A-M2)
- G VM PWB ASS'Y (SSB-7253A-M2)
- B VM PWB ASS'Y (SSB-7353A-M2)
- FRONT CONTROL PWB ASS'Y (SSB0L053A-M2)
- REMOCON SENSOR PWB ASS'Y (SSB-8053A-M2)
- DIGITAL INPUT MODULE PWB ASS'Y (SSB-7853A-M2)
- CONVERGENCE PWB ASS'Y (SSB-5053A-M2)
- CONVERGENCE OSD PWB ASS'Y (SSB0T053A-M2)
- CENTER SPEAKER PWB ASS'Y (SSB0A053A-M2)
- DIGITAL CONVERGENCE MODULE PWB ASS'Y (Included in CONVERGENCE PWB)
- LINE FILTER PWB ASS'Y (SSB-9053A-M2)
- DEF OSC PWB ASS'Y (SSB0H053A-M2)
- I-P CONVERT MODULE PWB ASS'Y (SSB0D053A-M2)
- FRONT I/F PWB ASS'Y (SSB0L253A-M2)
- AV JACK PWB ASS'Y (SSB0J053A-M2)
- RECEIVER PWB ASS'Y (SSB0R253A-M2)

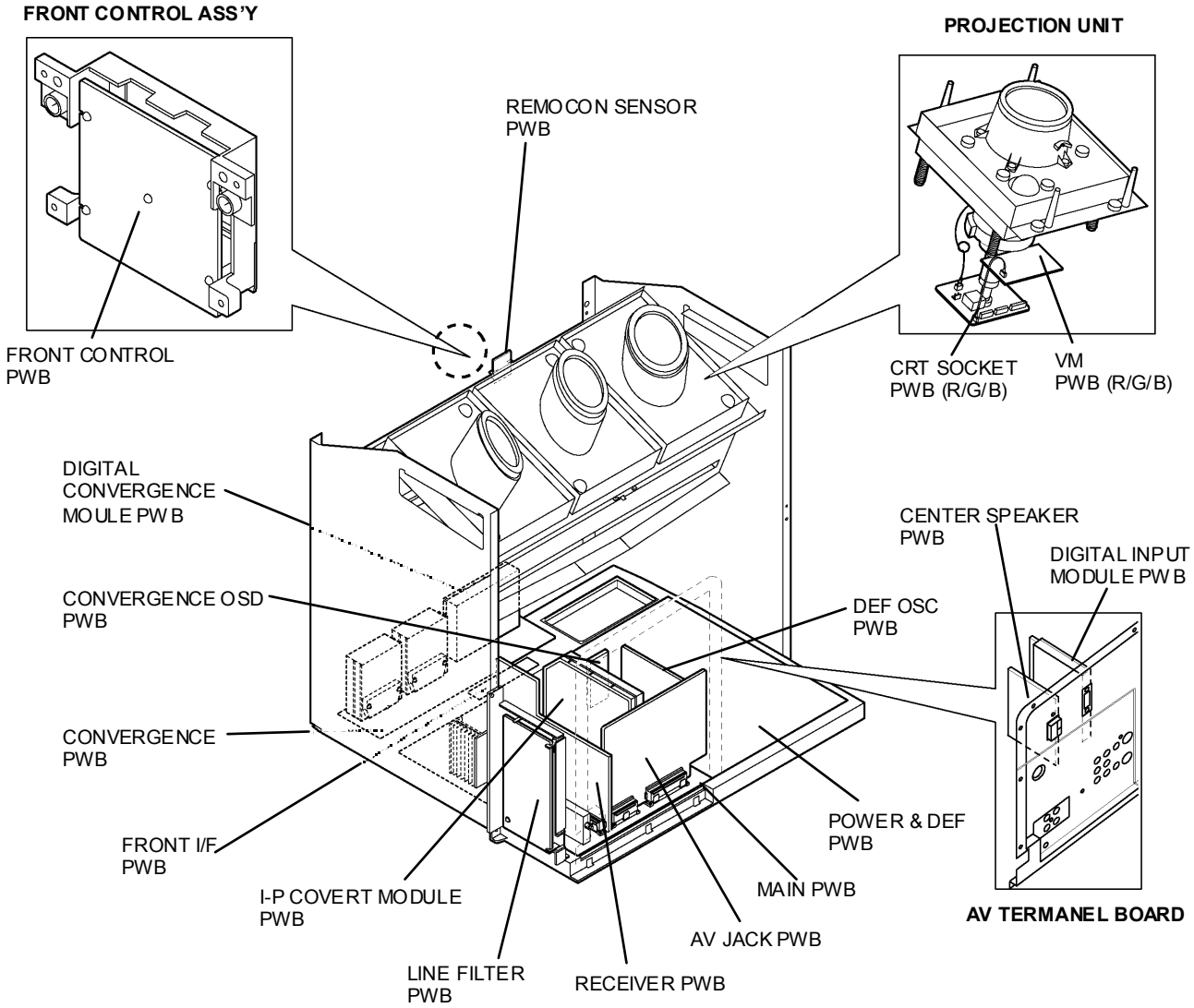

(This figure is only MAIN UNIT)

SPECIFIC SERVICE INSTRUCTIONS

SCREEN HANDLING CAUTIONS

■SCREEN STORAGE

Store the SCREEN ASS'Y in a standing position in order to avoid deformation. If the screen is stored horizontally, there is risk of deforming the screen face.

When necessary to place the SCREEN ASS'Y horizontally, position the screen side upwards and sure to place spacers between the screen and resting site (floor or stand etc.) to prevent the screen from sagging.

■ SCREEN SURFACE

Since the screen surface is easily scratched or soiled, use ample care when handling.

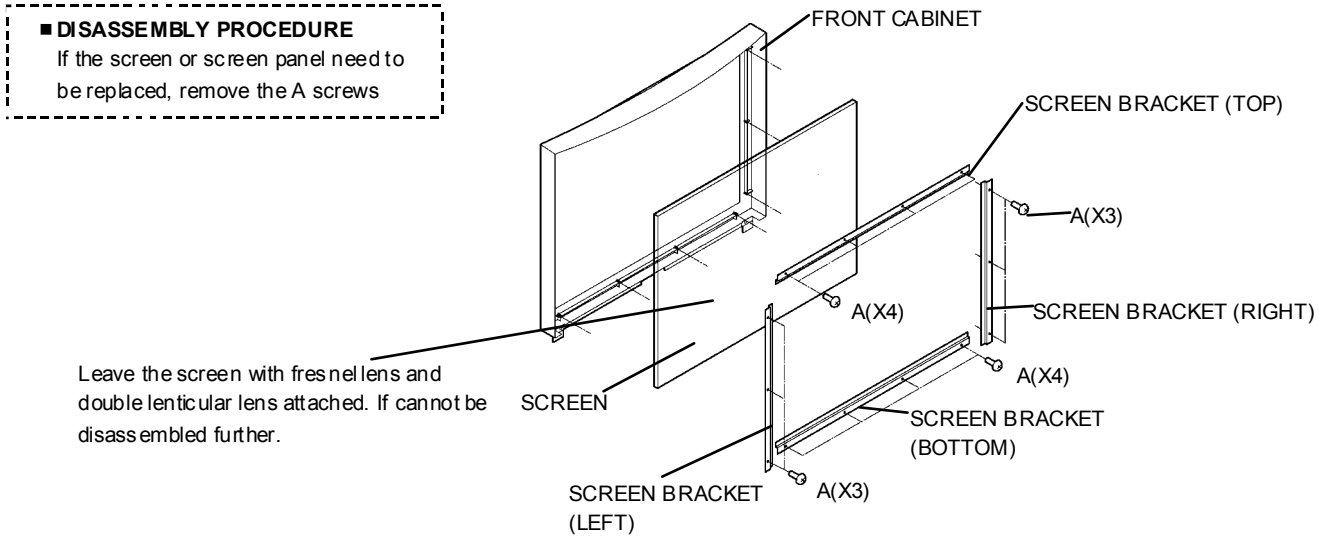

PROJECTION UNIT REPLACEMENT

■ ADJUSTMENT DURING REPLACEMENT

When replacing the three R, G and B projection units, first replace the R and B units and perform focus / screen / raster centering adjustments with reference to the G unit. Then replace the G unit and perform G focus / screen / convergence adjustment. Finally perform R & B . Convergence adjustments. **Use care to simultaneously removes all three-projection units.**

■ DISASSEMBLY CAUTION

The projection units include locations that are not to be disassembled during service. When replacing projection unit parts, disassemble to the state indicated in the figure below.

The figure indicates screws and wires that are not to be removed. Use care not to remove these.

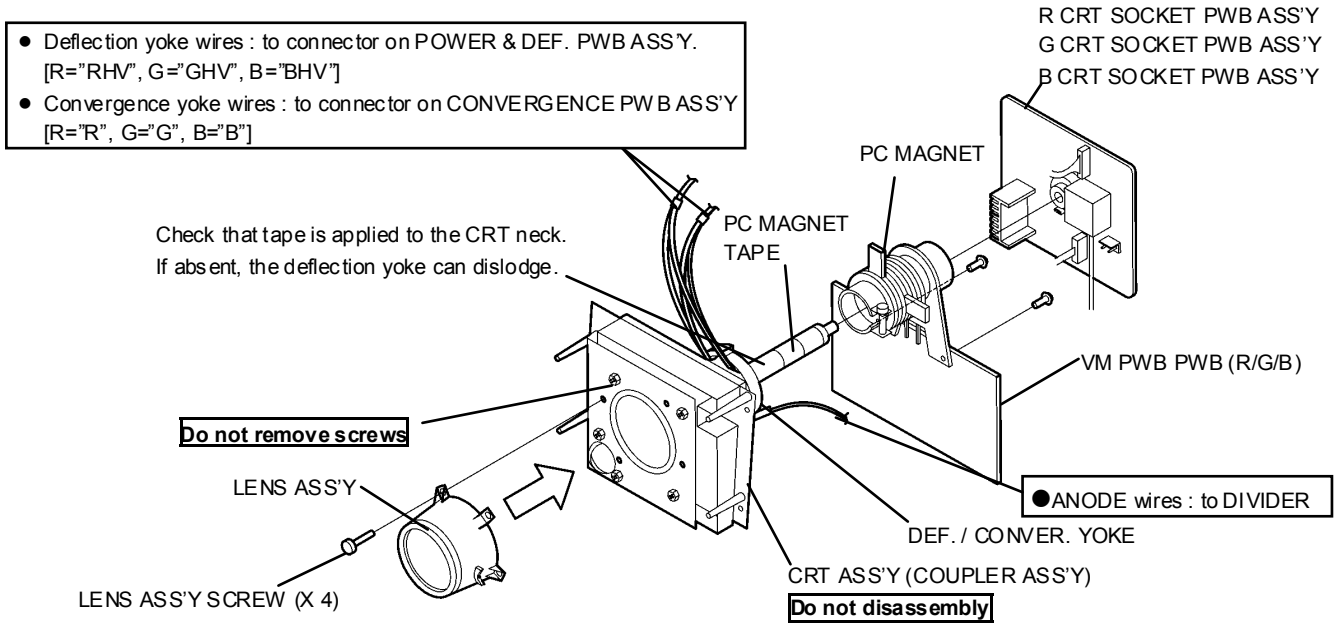

DISASSEMBLY PROCEDURE

■ SPEAKER GRILLE

1. Remove 4 screws **A** from rear side.
2. Open the door of the FRONT CONTROL BOX and remove 2 screws **A'** from front side.
3. Remove the SPEAKER GRILLE.

■ SPEAKER (WOOFER)

- Remove the SPEAKER GRILLE

1. Remove 4 screws **B**.
2. Take out the WOOFER.
3. Disconnect the speaker wire from speaker terminal.

■ SPEAKER (TWEETER)

- Remove the SPEAKER GRILLE

1. Remove 2 screws **C**.
2. Take out the TWEETER.
4. Disconnect the speaker wire from speaker terminal.

■ FRONT BOARD

- Remove the SPEAKER GRILLE.

1. Remove 4 screws **D**.
2. Remove the FRONT BOARD.

■ FRONT CONTROL BOX

- Remove the SPEAKER GRILLE.

1. Remove 4 screws **E** attaching the FRONT CONTROL BOX.
2. Disconnect the connector BH, X, R, BG on the FRONT CONTROL PWB.
3. Remove the FRONT CONTROL BOX.

■ FRONT CONTROL PWB

- Remove the SPEAKER GRILLE.
- Remove the FRONT CONTROL BOX.

1. Remove 3 screws **F** from rear side of FRONT CONTROL BOX.
2. Remove the FRONT CONTROL PWB.

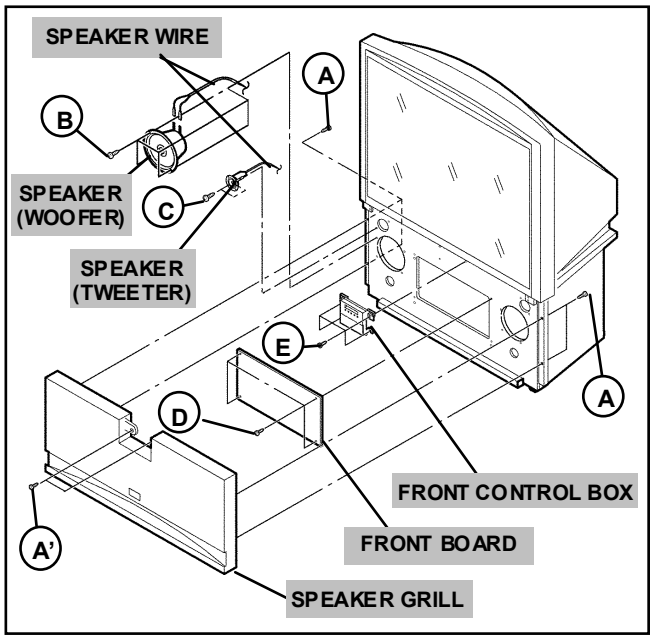

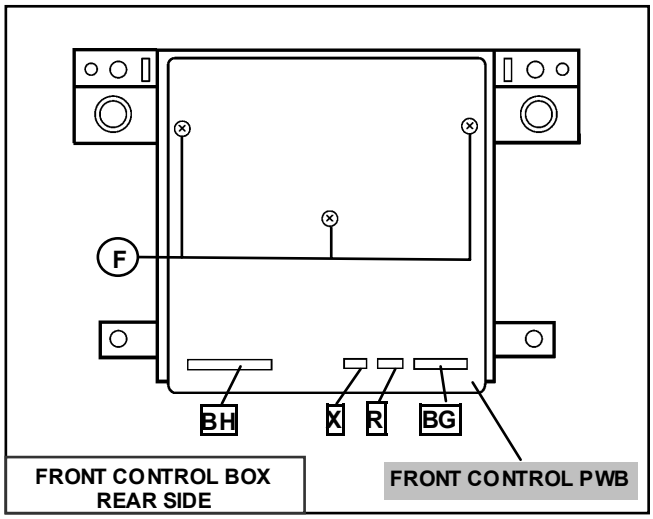

CAUTION AT DISASSEMBLY

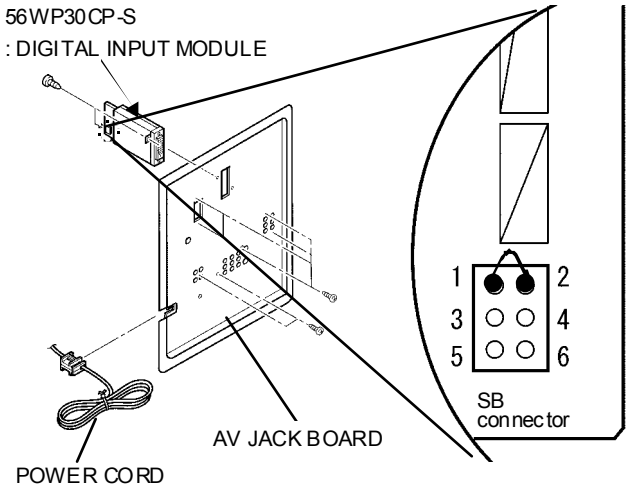

- Prior to disassembly, unplug the power code from the AC outlet without fail. (Turn the power "off".)
- Short the SB connector (1) pin and (2) pin of the DIGITAL INPUT MODULE. (At the time of assembling)
- Before the rear panel is inserted into the cabinet, release the short-circuit between the SB connector (1) pin and (2) pin of the DIGITAL INPUT MODULE.
- After releasing the short-circuit between the SB connectors, do not turn the power on until the rear panel is inserted into the cabinet.

* Negligence in carrying out the above steps may cause the inactivation of the TV.

■ SCREEN ASS'Y

- Remove the SPEAKER GRILLE.
- Remove the FRONT CONTROL BOX.

1. Remove 4 screws **G** under the SCREEN ASS'Y from front side.
2. Remove 10 screws **H** from rear side.
3. Remove the SCREEN ASS'Y.

NOTE :

- Place the screen with face upwards on a flat stand.
- Because of the large size, at least two parsons are recommended for removal and reassemble.
- Use core not to scratch the screen during work.
- During assembly, be sure to engage the left and right tabs with the cabinet mounting positions.
- When than sporting the SCREEN ASS'Y, avoid grasping the top of the screen panel, instead grasp the left and right areas.

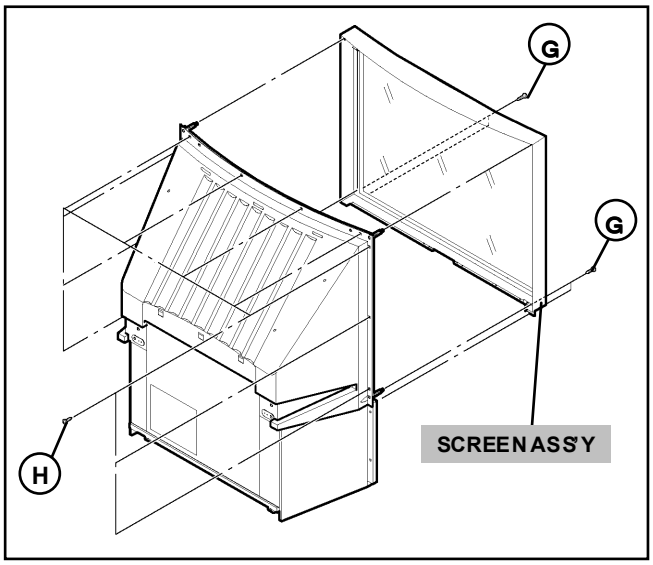

■ MIRROR

- Remove the SPEAKER GRILLE.
- Remove the FRONT CONTROL BOX.
- Remove the SCREEN ASS'Y.

1. Remove 2 screws **I** attaching the mirror stopper.
2. Raise slightly to disengage of the mirror from the hooks.
3. Remove the MIRROR.

NOTE :

- The MIRROR is front-coated. Do not touch the front of the MIRROR.
- At least 2 persons are recommended for removable and reassemble.

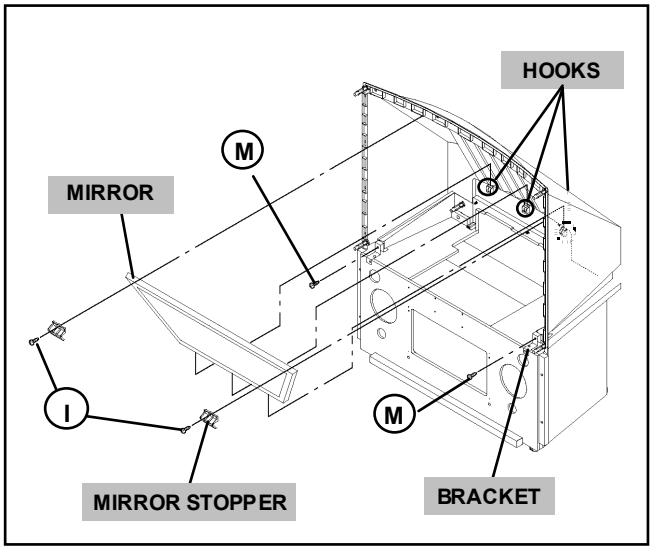

■ REAR PANEL

1. Loosen 7 screws **J.**
2. Remove 4 screws **K**.
3. Raise slightly REAR PANEL upward.
4. Remove the REAR PANEL.

NOTE :

- Before the rear panel is inserted into the cabinet, release the short-circuit between the SB connector (1) pin and (2) pin of the digital input unit. (Refer to "CAUTION AT DISASSEMBLY" on Page 11).
- After releasing the short-circuit between the SB connectors, do not turn the power on until the rear panel is inserted into the cabinet.

■ REAR COVER

- Remove the SPEAKER GRILLE.
- Remove the FRONT CONTROL BOX.
- Remove the SCREEN ASS'Y.

1. Remove 2 screws **L**.
2. Remove 2 screws **M** from front side
3. Slightly pull for backside to disengage of the REAR COVER from hooks.
4. Remove the REAR COVER.

> ⚠ **Prior to starting the work, be sure to read the following written instructions on the CAUTION LABEL attached to the REAR PANEL.**
> UNPLUG THE POWER CORD FROM AC OUTLET BEFORE OPEN THE REAR COVER (PANEL).
> When the rear cover (panel) is removed, follow "CAUTION AT DISASSEMBLY" procedure in the service manual before plugging the TV's power cord into an AC outlet.
> Failure to follow the procedure will result in PERMANENT damage to some of the television features.

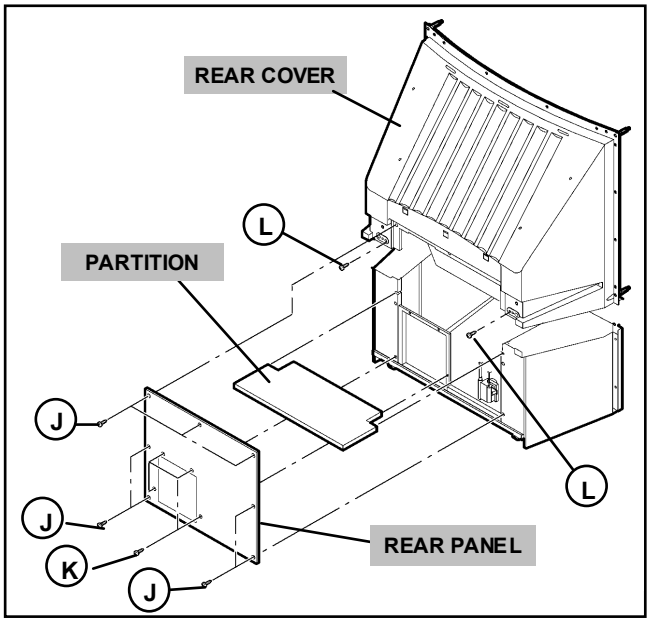

■ PARTITION

- Remove the REAR PANEL.

1. Pull out the PARTITION back ward.

■ MAIN UNIT

- Remove the SPEAKER GRILLE.
- Remove the connector BH , X , R , BG on the FRONT CONTROL PWB.
- Remove the REAR PANEL.

1. Remove 4 screws **O** from front side.
2. Pull out the MAIN UNIT rear side.

NOTE :

- Except for confirmation of projection of images on the screen and audio output through the speakers, the removed main unit is still workable in the same state as if it is still built in the TV set. Therefore, the main unit can be removed, if necessary, for board diagnosis, electric testing, etc. apart from confirmation of screen images and audio output.
- When wire clamps are removed during work, use care to restore them precisely to their original positions. Performance can be affected if these are not returned to the original positions.
- Because of the large size, at least two persons are recommended for removal and reassemble.
- When carrying the main unit, use care not to drop, shock or shake it.
- Do not stain or damage the lens of the projection unit.
- Do not look through the projection unit.

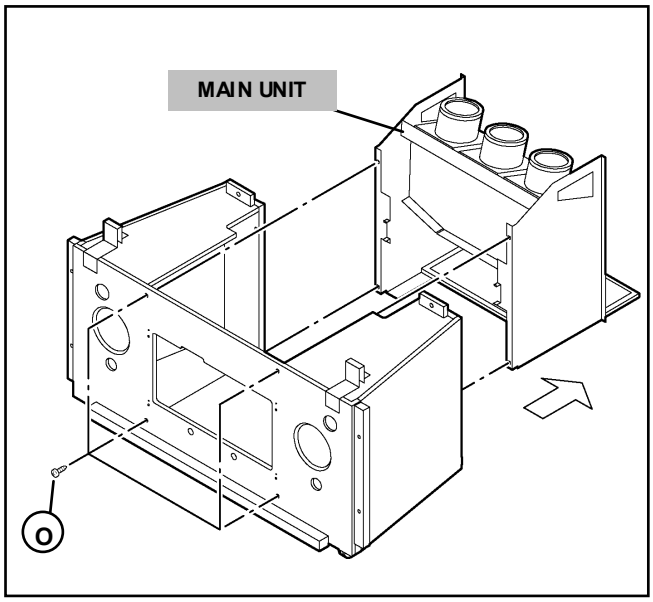

◆ CHECKING THE P.W. BOARD

When checking the MAIN PWB, POWER & DEF PWB, etc., raise the MAIN UNIT with the HV DIVIDER side down for the sake of convenience. You can checking the MAIN PWB.

■ LINE FILTER PWB

- Remove the REAR PANEL.
- Remove the AV JACK BOARD.

1. Disconnect the connector B F on the LINE FILTER PWB.
2. Remove 3 screws **P** attaching the LINE FILTER BRACKET and earth wire.
3. Remove 2 screws **Q** attaching LINE FILTER PWB.
4. Remove the LINE FILTER PWB.

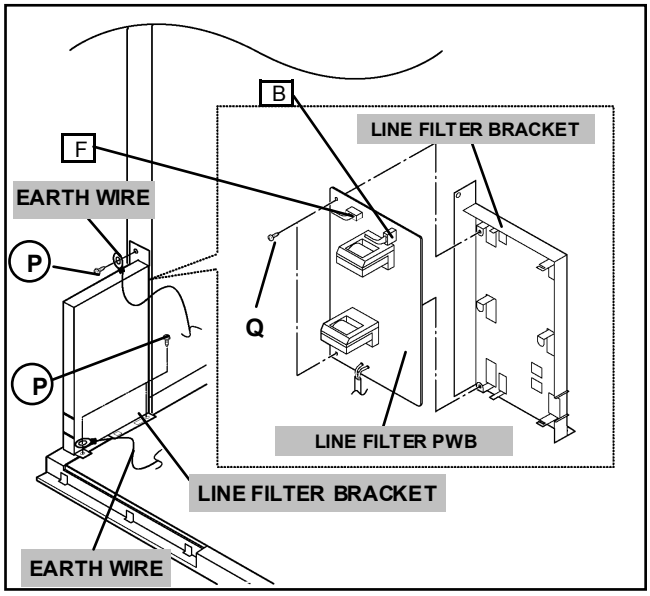

■ MAIN CHASSIS

- Remove the REAR PANEL.
- Remove the AV JACK BOARD.
- Remove the LINE FILTER BRACKET.

1. Remove 2 screws **R** both side of the MAIN CHASSIS.
2. Remove 1 screws **R'** attaching the earth wire.
3. Pull out the MAIN CHASSIS for back side.

NOTE :

- If necessary, remove the anode wires, connectors, respectively.

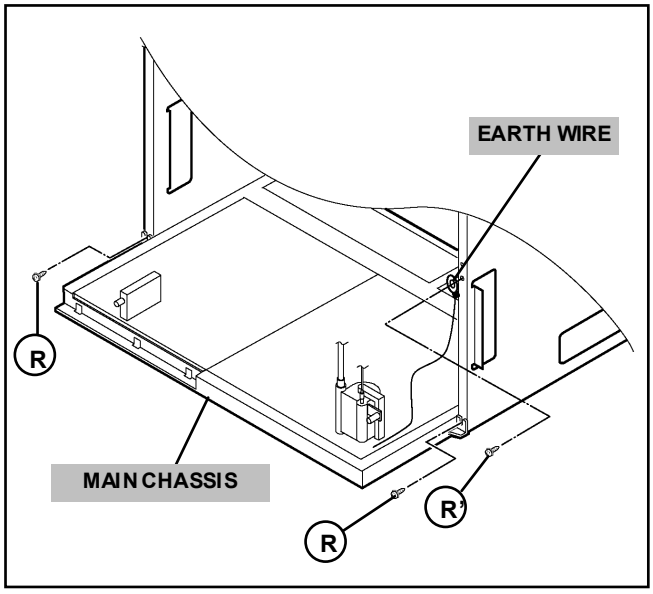

■ PROJECTION UNIT

- Remove the SPEAKER GRILLE
- Remove the FRONT CONTROL BOX
- Remove the REAR PANEL
- Remove the MAIN UNIT.

1. Remove the CRT SOCKET PWB.
2. Remove 4 screws **S** attaching the PROJECTION UNIT.
3. Pull out the PROJECTION UNIT, upward.

NOTE :

- Refer to "PROJECTION UNIT REPLACEMENT" on page 10 when taking out and replacing the PROJECTION UNIT.
- When wire clamps are removed during work, use care to restore them precisely to their original positions. Performance can be affected if these are not returned to the original positions.

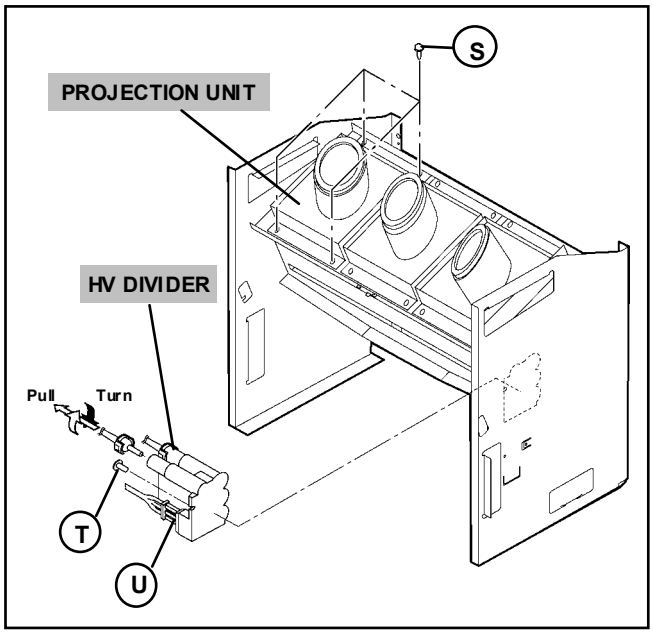

■ HV DIVIDER

- Remove the REAR PANEL

1. Remove 1 screws **T** attaching the HV DIVIDER.
2. Remove the HV DIVIDER.

∗ Wires of the transformer (FBT) and CRT of each PROJECTION UNIT can be removed by turning the connector portions.

NOTE :

- If necessary, remove the anode wires, and replacing the HV DIVIDER, take care to correctly engage the **U** connector.

■ AV JACK BOARD

- Remove the REAR PANEL

1. Remove 7 screws **V**.
2. Pull out the POWER CORD CLAMP from AV JACK BOARD left side.
3. Remove nut **W** attaching the antenna terminal.
4. Remove the AV JACK BOARD.

■ DIGITAL INPUT MODULE

- Remove the REAR PANEL

1. Remove 2 screws **X** from rear side of the AV JACK BOARD.
2. Remove the DIGITAL INPUT MODULE.

NOTE :

- When removing the DIGITAL INPUT MODULE, refer to the "CAUTION AT DISASSEMBLY" section on page 11.

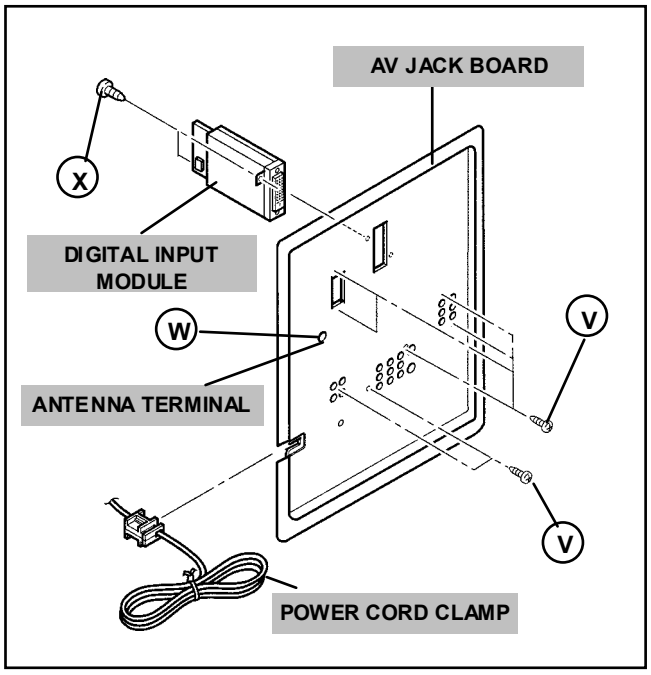

REPLACEMENT OF CHIP COMPONENT

■ CAUTIONS

1. Avoid heating for more than 3 seconds.
2. Do not rub the electrodes and the resist parts of the pattern.
3. When removing a chip part, melt the solder adequately.
4. Do not reuse a chip part after removing it.

■ SOLDERING IRON

1. Use a high insulation soldering iron with a thin pointed end of it.
2. A 30w soldering iron is recommended for easily removing parts.

■ REPLACEMENT STEPS

1. How to remove Chip parts

◆ **Resistors, capacitors, etc**

(1) As shown in the figure, push the part with tweezers and alternately melt the solder at each end.

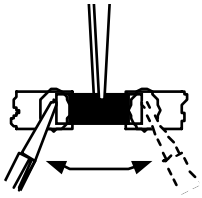

(2) Shift with tweezers and remove the chip part.

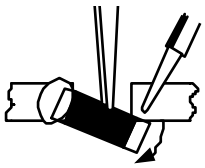

◆ **Transistors, diodes, variable resistors, etc**

(1) Apply extra solder to each lead.

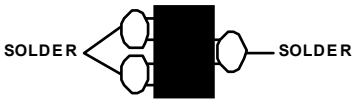

(2) As shown in the figure, push the part with tweezers and alternately melt the solder at each lead. Shift and remove the chip part.

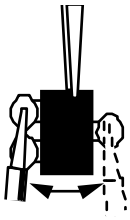

Note : After removing the part, remove remaining solder from the pattern.

2. How to install Chip parts

◆ **Resistors, capacitors, etc**

(1) Apply solder to the pattern as indicated in the figure.

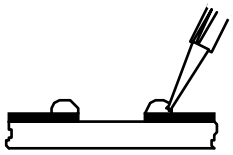

(2) Grasp the chip part with tweezers and place it on the solder. Then heat and melt the solder at both ends of the chip part.

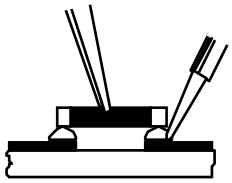

◆ **Transistors, diodes, variable resistors, etc**

(1) Apply solder to the pattern as indicated in the figure.
(2) Grasp the chip part with tweezers and place it on the solder.
(3) First solder lead **A** as indicated in the figure.

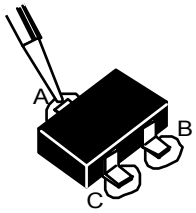

(4) Then solder leads **B** and **C**.

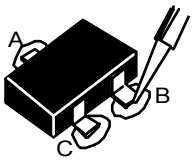

MEMORY IC REPLACEMENT

1. Memory IC

This model use a memory IC.
This memory IC stores data for proper operation of the video and deflection circuits.
When replacing, be sure to use an IC containing this (initial value) data.

2. Memory IC replacement procedure

(1) Power off

Switch off the power and disconnect the power cord from the wall outlet.

(2) Replace the memory IC

Initial value must be entered into the new IC.

(3) Power on

Connect the power cord to the wall outlet and switch on the power.

(4) SERVICE MENU setting

1) Press **SLEEP TIMER** key and, while the indication of **SLEEP TIMER 0 MIN** is being displayed, press **DISPLAY** key and **VIDEO STATUS** key on the remote control unit (Fig.2) simultaneously.
2) The SERVICE MENU screen of Fig.1 is displayed.
3) Verify what to set in the SERVICE MENU, and set whatever is necessary (Fig.1).
   Refer to the SERVICE ADJUSTMENT for setting.
4) Press the EXIT key twice to return normal screen.

(5) Receive channel setting

Refer to the OPERATING INSTRUCTIONS (USER'S GUIDE) and set the receive channels (Channels Preset) as described.

(6) User settings

Check the user setting items according to after page.
Where these do not agree, refer to the OPERATING INSTRUCTIONS (USER'S GUIDE) and set the items as described.

SERVICE MENU

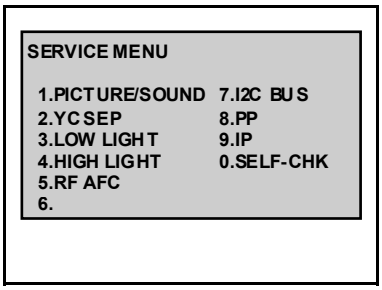

Fig.1

SERVICE MENU SELECT KEY

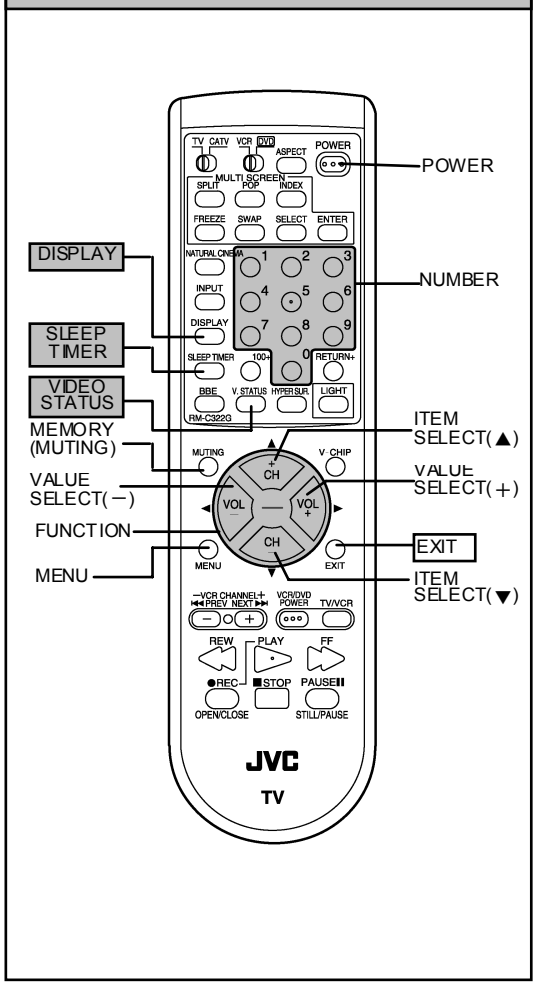

Fig.2

SHIPPING FACTORY SETTING

VIDEO STATUS MEMORY (NTSC / 480p)

Item	SETTING VALUE				
	TINT	COLOR	PICTURE	BRIGHT	DETAIL
STANDARD	00	00	00	00	00
THATER	00	00	00	00	00
DYNAMIC	00	00	+10	00	+1

(HD)

Item	SETTING VALUE				
	TINT	COLOR	PICTURE	BRIGHT	DETAIL
STANDARD	00	00	00	00	00
THATER	00	00	00	00	00
DYNAMIC	00	00	+2	00	00

CHANNEL SETTING (CHANNEL SUMMARY)

BAND	CH Display		Setting	BAND	CH Display		Setting
VHF_L	02		○	SUPER	N	27	
	03				O	28	○
	04		○		P	29	
	05		○		Q	30	
	06		○		R	31	○
VHF_H	07		○		S	32	○
	08				T	33	
	09		○		U	34	
	10				V	35	
	11		○		W	36	○
	12			SUBMID	A-7	93	
	13		○		A-6	394	
UHF	14		○		A-5	95	
	36		○		A-4	96	○
	41				A-3	97	○
	46				A-2	98	○
	63		○		A-1	99	
	69		○		A-8	01	
MID	A	14	○	HYPER	W+11	47	○
	B	15	○		W+12	48	○
	C	16	○		W+17	53	○
	D	17	○				
	E	18	○		W+23	59	○
	F	19					
	G	20		ULTRA	W+29		
	H	21	○				
	I	22			W+51		
SUPER	J	23					
	K	24	○		W+78		
	L	25					
	M	26			W+84		

SHIPPING FACTORY SETTING
(USER SETTING)

Setting item	Setting value
POWER	OFF
CHANNEL	CABLE-02
BBE	ON
VOLUME	10
INPUT	TV
DISPLAY	OFF
NATURAL CINEMA	AUTO
SLEEP TIMER	0
ASPECT	REGULAR
VIDEO STATUS	DYNAMIC
HYPER SURROUND	OFF
SPLIT SOURCE	LEFT SIDE : CH 02 RIGHT SIDE : CH 04
POP SOURCE	LEFT SIDE : CH 02 RIGHT UPPER : CH 04 RIGHT CENTER : CH 05 RIGHT BOTTOM : CH 07
VERTICAL POSITION	CENTER
CENTER CH INPUT	OFF
XDS ID	ON
CONVERGENCE	OPTIMUM CONDITION
POWER INDICATOR	HIGH

Setting item	Setting value
TINT / COLOR / PICTURE /BRIGHT / DETAIL	Refer to setting of Video status memory at shipping factory setting
COLOR TEMPERATURE	HIGH
DIG. NOISE CLEAR	CENTER
NOISE MUTING	ON
BASS / TREBLE / BALANCE	CENTER
MTS	STEREO
SET CLOCK	Unnecessary to set
ON / OFF TIMER	NO
LANGUAGE	ENG
CLOSED CAPTION	OFF (CC1 / T1)
FRONT PANEL LOCK	OFF
AUTO SHUT OFF	OFF
AUTO TUNER SET UP	Unnecessary to set
DIGITAL-IN (at 480p signal input)	SIZE 1
CHANNEL SUMMARY	Refer to Last memory (CH. summary)
V-CHIP	OFF
SET LOCK CODE	Unnecessary to set
AUTO DEMO	OFF

SERVICE ADJUSTMENTS

ADJUSTMENT PREPARATION

1. **You can make the necessary adjustments for this unit with either the Remote Control Unit or With the adjustment tools and parts as given below.**
2. **Adjustment with the Remote Control Unit is made on the basis of the initial setting values, however, the new setting values which set the screen to its optimum condition may differ from the initial settings.**
3. Make sure that AC power is turned on correctly.
4. Turn on the power for set and test equipment before use, and start the adjustment procedures after waiting at least 30 minutes.
5. Unless otherwise specified, prepare the most suitable reception or input signal for adjustment.
6. **Never touch any adjustment setting value which are not specified in the list for this adjustment.**
7. Presetting before adjustment
   Unless otherwise specified in the adjustment instructions, preset the following functions with the remote control unit:

ADJUSTMENT EQUIPMENT

1. DC voltmeter (or digital voltmeter)
2. Oscilloscope
3. Signal generator (Pattern generator)
   [NTSC / 480i / 480p / 720p / 1080i / HDCP]
4. Remote control unit
5. TV audio multiplex signal generator
6. Frequency counter

ADJUSTMENT ITEMS

Adjustment items	
1	Check (×3)
2	HORIZONTAL FREQUENCY adjustment
3	FOCUS & BEAM SPOT adjustment
4	CONVERGENCE & DEFLECTION adjustment
5	VIDEO adjustment
6	MTS adjustment

● SETTING POSITION

SETTING ITEM	SETTING POSITION	SETTING ITEM	SETTING POSITION
VIDEO STATUS	STANDARD	ASPECT	FULL
BASS, TREBLE, BALANCE	CENTER	VERTICAL POSITION	CENTER
HYPER SURROUND	OFF	BBE	ON
TINT, COLOR, PICTURE, BRIGHT, DETAIL	CENTER	ON/OFF TIMER	NO
COLOR TEMPERATURE	HIGH	AUTO SHUTOFF	OFF
DIGITAL NOISE CLEAR	CENTER		

ADJUSTMENT FLOWCHART

WHEN REPLACING SCREEN AND PROJECTION UNIT

●Contains only the main adjustments. Also confirm other adjustments as required.

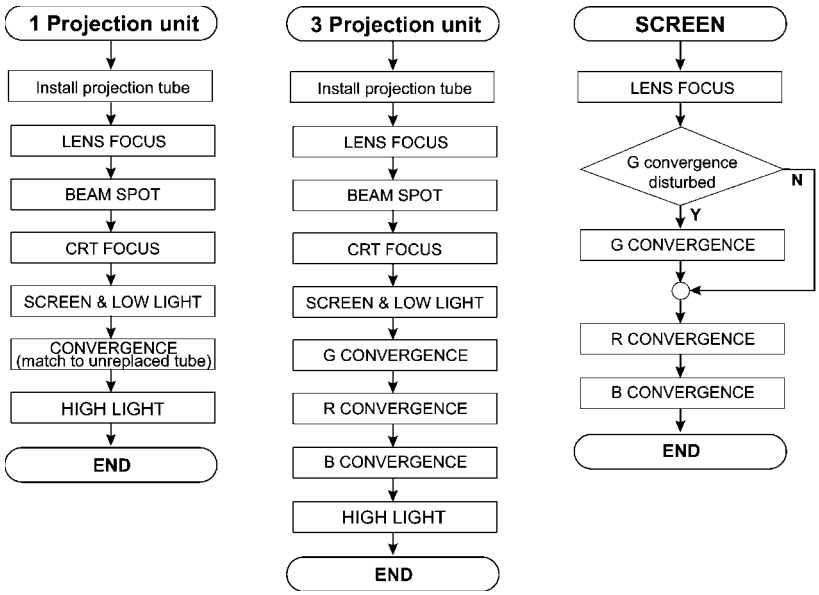

ADJUSTMENT LOCATION (1/2)

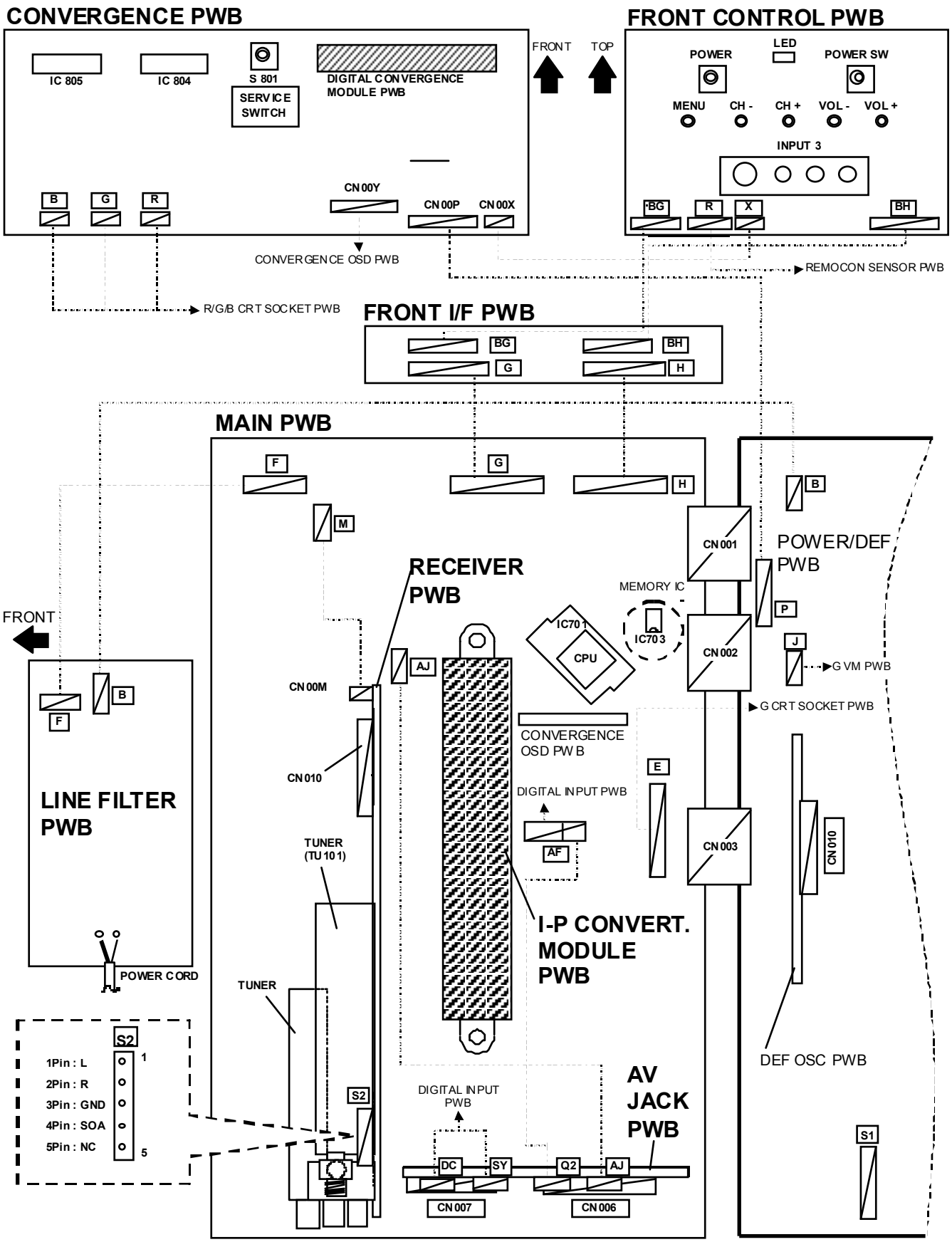

ADJUSTMENT LOCATION (2/2)

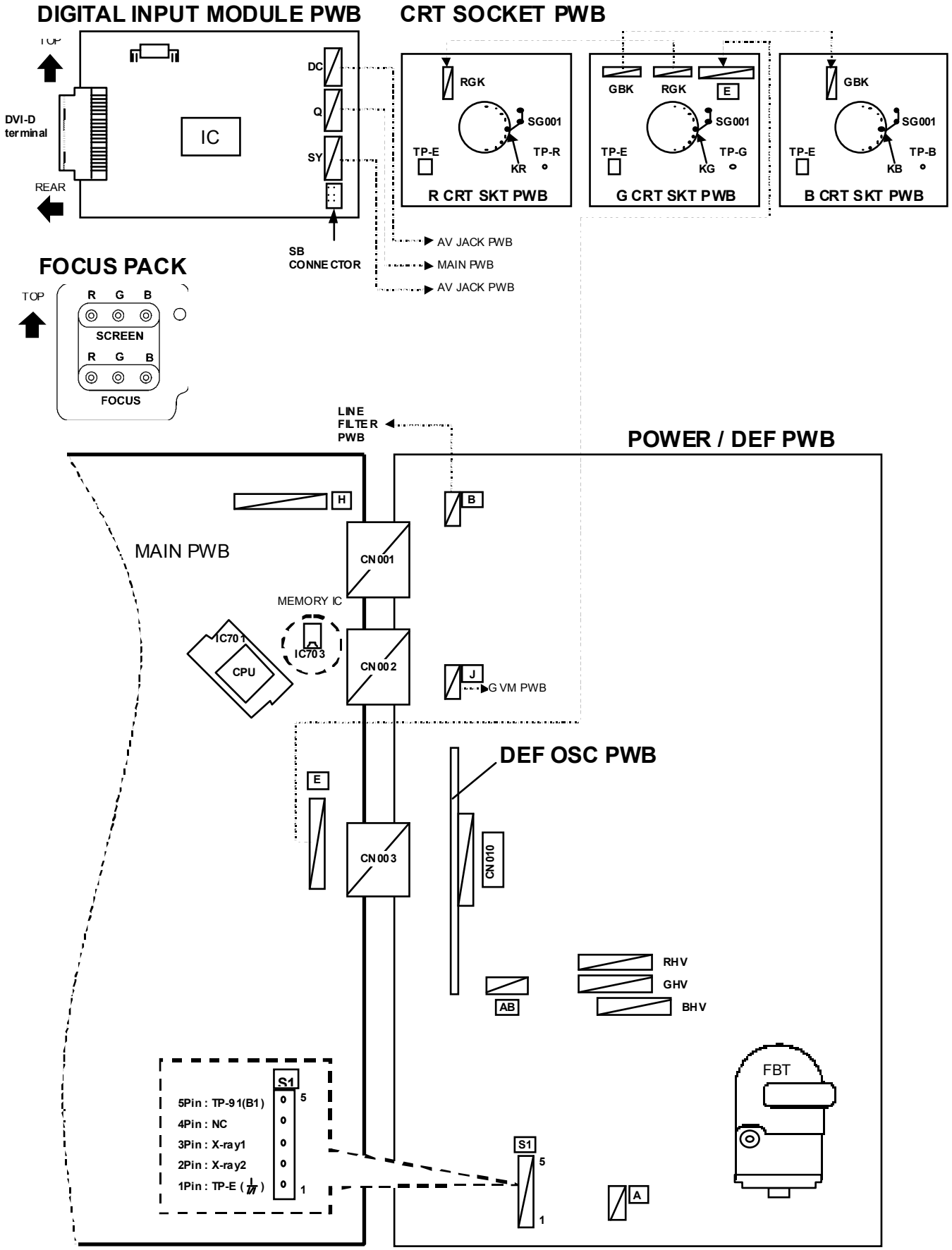

BASIC OPERATION OF SERVICE MENU

1. TOOL OF SERVICE MENU OPERATION

Operate the SERVICE MENU with the REMOTE CONTROL UNIT.

2. SERVICE MENU ITEMS

In general, basic setting (adjustments) items or verifications are performed in the SERVICE MENU.

1. PICTURE / SOUND ····· This sets the setting values of the VIDEO/CHROMA /AUDIO and DEFLECTION circuits.
2. YC SEP ····· This is used when the YC mode is adjusted. **[Do not adjust]**
3. LOW LIGHT ····· This sets the setting values of the WHITE BALANCE circuit.
4. HIGH LIGHT ····· This sets the setting values of the WHITE BALANCE circuit.
5. RF AFC ····· This is used when the IF VCO is adjusted. **[Do not adjust]**
6. (BLANK)
7. I2C BUS ····· This is used when ON/OFF if the I^2C BUS control is stop. **[Do not adjust]**
8. PP ····· This sets the setting value of the output of P&P data.
9. IP ····· This sets the setting value of the IP circuit. **[Do not adjust]**
0. SELF-CHK ····· This sets the self checking of the TV circuit.

3. BASIC OPERATIONS OF THE SERVICE MENU

(1) How to enter the SERVICE MENU.

Press **SLEEP TIMER** key and, while the indication of "**SLEEP TIMER 0 MIN.**" is being displayed, press **DISPLAY** key and **VIDEO STATUS** key on the remote control unit simultaneously to enter the **SERVICE MENU** screen as shown in the fig.1.

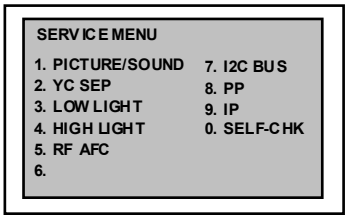

Fig. 1

(2) SERVICE MENU screen selection

Press the number key to select any of the following items.

1.PICTURE/SOUND	7.I2C BUS
2.YC SEP	8.PP
3.LOW LIGHT	9.IP
4.HIGH LIGHT	0.SELF-CHK
5.RF AFC	

(3) Enter the any setting mode

- **1. PICTURE / SOUND mode**

1) Select the 1. PICTURE / SOUND items with the number key, and the FUNCTION (▲/▼) key is pressed the 1. PICTURE / SOUND mode, the screen will be displayed as shown in figure page later.
2) Then the settings or verifications can be performed.

- **2.YC SEP, 3.LOW LIGHT, 4.HIGH LIGHT, 5.RF AFC, 7.I^2C BUS, 8.PP, 9.IP and 0.SELF-CHK mode**

1) If you select any of 2.YC SEP 3.LOW LIGHT 4.HIGH-LIGHT 5.RF AFC 7.I^2C BUS, 8.PP, 9.IP and 0.SELF-CHK mode items, and the numbers key is pressed from SERVICE MENU, the each screens will be displayed as shown in figure page later.
2) Then the settings or verifications can be performed.

KEY FUNCTION of SERVICEMENU

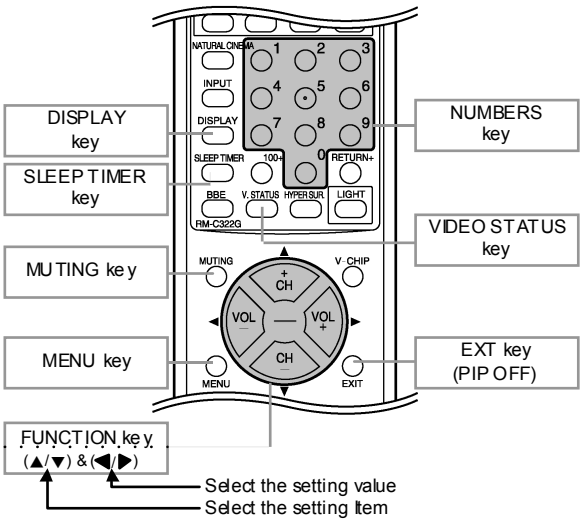

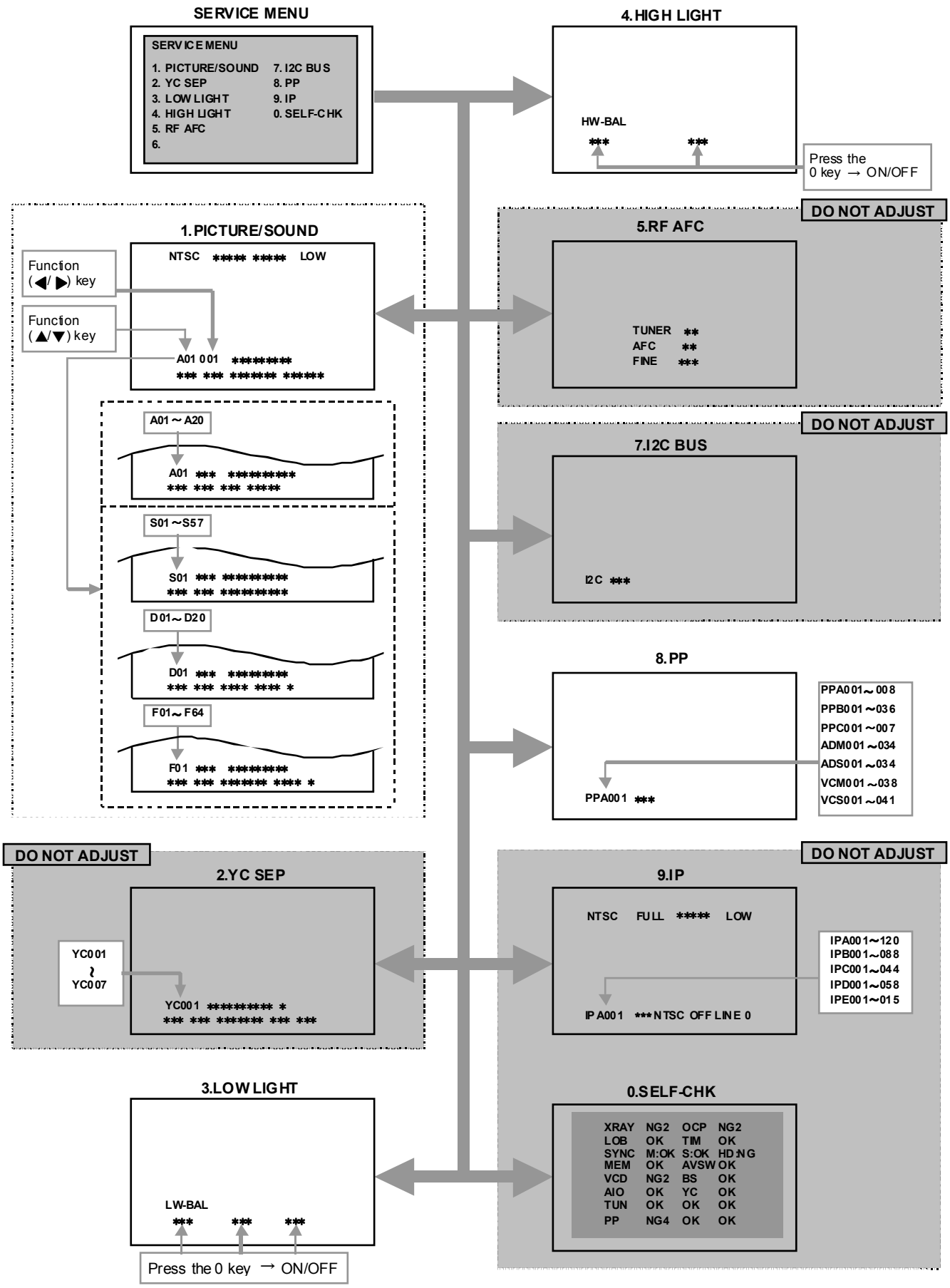
SERVICE MENU
SERVICE MENU
1. PICTURE/SOUND
2. YC SEP
3. LOW LIGHT
4. HIGH LIGHT
5. RF AFC
6.
7. I2C BUS
8. PP
9. IP
0. SELF-CHK
4. HIGH LIGHT
HW-BAL
***
***
Press the 0 key → ON/OFF
DO NOT ADJUST
5.RF AFC
TUNER **
AFC **
FINE ***
1. PICTURE/SOUND
NTSC ***** ***** LOW
Function (◀/ ▶) key
Function (▲/▼) key
A01 001 ********
*** *** ******* ******
A01 ~ A20
A01 *** *********
*** *** *** *****
S01 ~ S57
S01 *** *********
*** *** *********
D01 ~ D20
D01 *** ********
*** *** **** **** *
F01 ~ F64
F01 *** ********
*** *** ******* **** *
DO NOT ADJUST
7.I2C BUS
I2C ***
8. PP
PPA001 ***
PPA001 ~ 008
PPB001 ~ 036
PPC001 ~ 007
ADM001 ~ 034
ADS001 ~ 034
VCM001 ~ 038
VCS001 ~ 041
DO NOT ADJUST
2.YC SEP
YC001 ~ YC007
YC001 ********* *
*** *** ******* *** ***
DO NOT ADJUST
9.IP
NTSC FULL ***** LOW
IPA001 ***NTSC OFF LINE 0
IPA001 ~ 120
IPB001 ~ 088
IPC001 ~ 044
IPD001 ~ 058
IPE001 ~ 015
3.LOW LIGHT
LW-BAL
***
***
***
Press the 0 key → ON/OFF
0.SELF-CHK
XRAY NG2 OCP NG2
LOB OK TIM OK
SYNC M:OK S:OK HD:NG
MEM OK AVSW OK
VCD NG2 BS OK
AIO OK YC OK
TUN OK OK OK
PP NG4 OK OK

(4) Setting method

1) UP / DOWN (▲/▼) FUNCTION key
   Select the SETTING ITEM.
2) LEFT / RIGHT (◀/▶) FUNCTION key
   Setting (adjust) the setting value of the SETTING ITEM.
   When the MUTING key is pressed the setting value will be stored (memorized).
3) EXIT key
   Returns to the previous screen.

(5) Releasing SERVICE MENU

1) After returning to the SERVICE MENU upon completion of the setting work, press the EXIT key again.

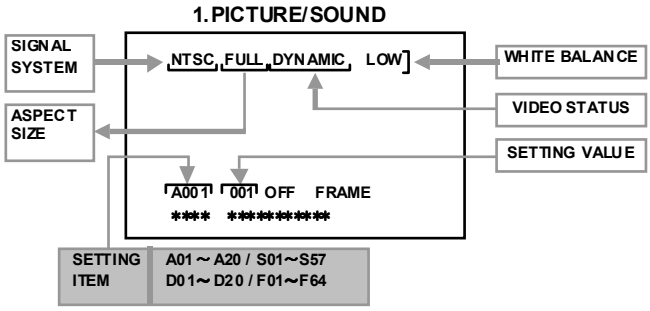

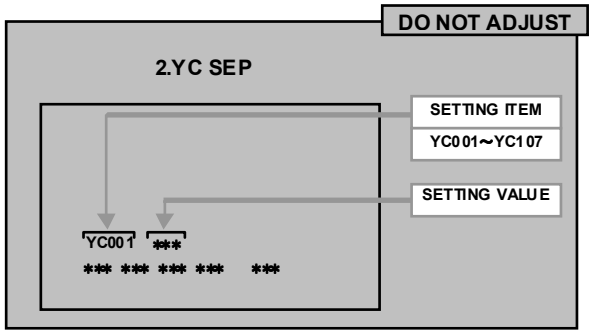

● **WHITE BALANCE setting**

The setting for 3.LOW LIGHT and 4.HIGH LIGHT are described in the WHITE BALANCE page of ADJUSTMENT.

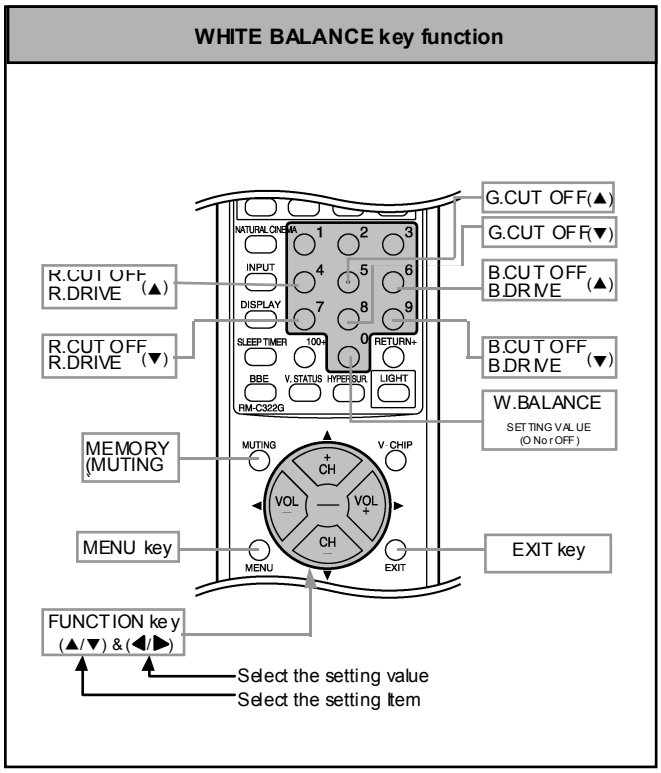

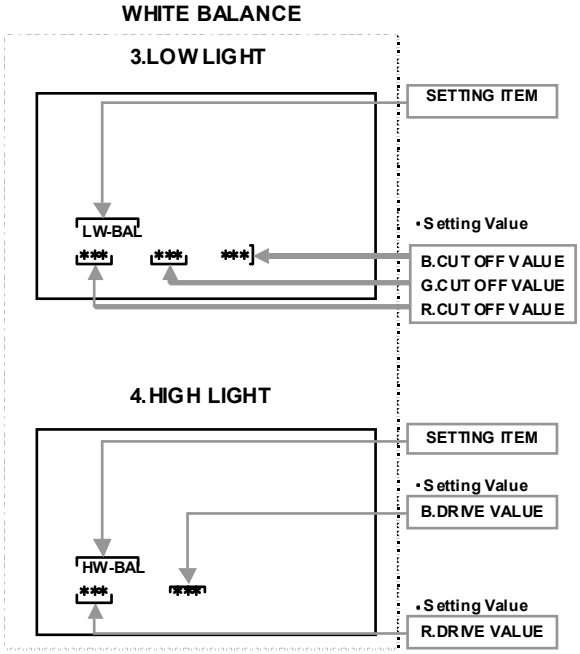

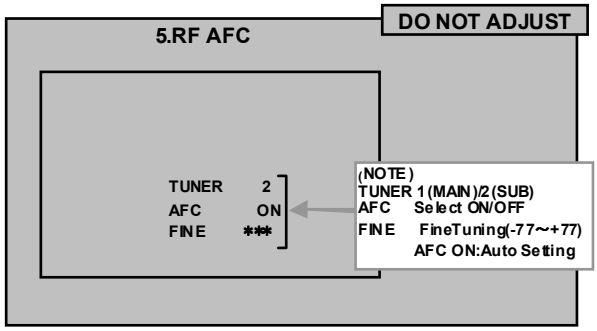

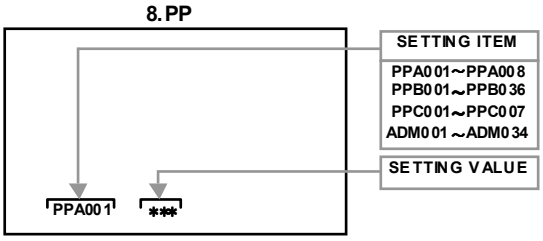

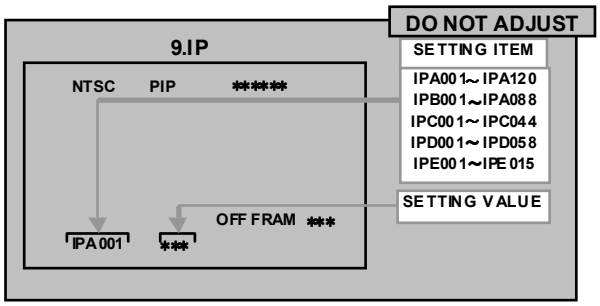

8.PP / 9.IP setting

1) FUNCTION(▲/▼) key ····· Select the setting Item
2) FUNCTION (◀/▶) key ····· Select the setting value.
3) SLEEP TIMER key ····· Skip the each setting Item.
4) MUTING Key ····· Setting value will be stored.
5) EXIT key ····· Returns to the service menu.
   * Press the EXIT key again, then releasing the service menu.

0.SELF-CHK DISPLAY

Press 0 key of remote control unit that checks the circuit operating status and in event of malfunction displays stores the data in memory. (shown in figure)

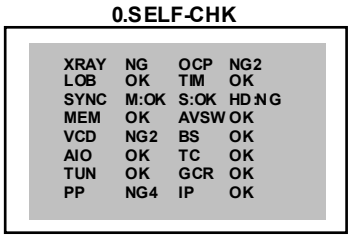

INITIAL SETTING VALUE OF SERVICE MENU

1. Adjustment of the SERVICE MENU is made on the basis of the initial setting values; however, the new setting values which set the screen in its optimum condition may differ from the initial setting.
2. Do not change the initial setting values of the setting items NOT LISTED IN ADJUSTMENT.
3. The (∗1 or ∗2)marked items in following table, it is NO REQUIREMENT for adjustment. If values had change by the missing, set the initial values in the following table.

CAUTION

Never change the initial setting value any adjustments **except** for those that are designated in the adjustment procedures.

In case where you have made undesignated adjustments by mistake, never press the MUTING key on the remote control unit.

Whenever you had not pressed the MUTING key, you would be able to recover the initial value by switching the POWER SW (on/off) key.

1. PICTURE / SOUND

■SOUND SYSTEM

Item No.	Item name	Variable range	Initial setting value	Item No.	Item name	Variable range	Initial setting value
A01	NOISE DET.	0 / 1	001	A11	INPUT GAIN	0 / 1	000
A02	INPUT LEVEL	0 ～ 63	027	A12	FIL OFFSET	-128 ～ +127	000
A03	FH MONITOR	0 / 1	000	A13	BBE BASS	-128 ～ +127	+003
A04	STEREO VCO	0 ～ 63	035	A14	BBE TREBLE	-128 ～ +127	+003
A05	PILOT CAN	0 / 1	000	A15	BASS	-128 ～ +127	-005
A06	FILTER	0 ～ 63	035	A16	TREBLE	-128 ～ +127	-004
A07	LOW SEP	0 ～ 63	027	A17	Not use	———	———
A08	HI SEP	0 ～ 63	028	A18	Not use	———	———
A09	5FH MON	0 / 1	000	A19	Not use	———	———
A10	SAP VCO	0 ～ 63	040	A20	Not use	———	———

■DEFLECTION SYSTEM

Item No.	Item name	Variable range	Initial setting value	Item No.	Item name	Variable range	Initial setting value
D01	V. SIZE	0~127	013	D11	H. EHT	0~7	001
D02	EW PARABORA	0~63	022	D12	EHT GAIN	0~7	000
D03	H. SIZE	0~63	037	D13	SUBTITLE V. AREA	0～15	000
D04	V. S-CORRECT	0~63	040	D14	H. CENTER	0～255	161
D05	V. LINEARITY	0~63	041	D15	H. FREQUENCY	0～255	194
D06	V. CENTER	0~63	027	D16	H. BLK	0～255	063
D07	TRAPEZIUM	0~63	029	D17	OSD OFFSET	0～127	080
D08	EW CORNER LOWER	0~15	008	D18	COMPULSION TWIN SCREEN	0~7	000
D09	EW CORNER UPPER	0~15	008	D19	COMPULSION DEF RST OUTPUT	0 / 1	000
D10	V. EHT	0~7	004	D20	COMPULSION 1080i	0 / 1	000

■PICTURE SYSTEM

(NTSC / 480i / 480p) (1/2)

Item No.	Item name	Variable range	NTSC		480i		480p	
			Standard	Theater	Standard	Theater	Standard	Theater
S01	SUB COLOR	0~127	080	072	077	071	075	075
S02	SUB TINT	0~127	075	063	077	074	080	079

(720p / 1080i / HDCP) (2/2)

Item No.	Item name	Variable range	720p / 1080i		HDCP			
					480p		1080i / 720p	
			Standard	Theater	Standard	Theater	Standard	Theater
S01	SUB COLOR	0~127	063	063	075	075	074	070
S02	SUB TINT	0~127	083	072	080	079	072	061

(NTSC / 480i) (1/2)

Item No.	Item name	Variable range	NTSC		480i	
			Standard	Theater	Standard	Theater
S03	SUB BRIGHT	0~255	134	135	130	133
S04	SUB CONTRAST	0~127	063	046	080	047
S05	SUB BRIGHT OFFSET	-128~127	—	—	—	—
S06	SUB CONTRAST OFFSET	-128~127	—	—	—	—

(480p / 720p / 1080i / HDCP) (2/2)

Item No.	Item name	Variable range	480p / 720p / 1080i		HDCP		SPLIT / FREEZE	
			Standard	Theater	Standard	Theater	Standard	Theater
S03	SUB BRIGHT	0~255	131	135	—	—	—	—
S04	SUB CONTRAST	0~127	084	046	—	—	—	—
S05	SUB BRIGHT OFFSET	-128~127	—	—	000	000	000	000
S06	CUB CONTRAST OFFSET	-128~127	—	—	000	000	-010	000

(NTSC / 480i / 480p / 720p / 1080i / HDCP)

Item No.	Item name	Variable range	NTSC		480i		480p		720p / 1080i / HDCP	
			Standard	Theater	Standard	Theater	Standard	Theater	Standard	Theater
S07	B-Y DEMODURATION	0~63	013	040	014	031	007	020	004	010
S08	R-Y DEMODULATION	0~7	007	000	007	000	007	002	003	003
S09	G-Y MATRIX SW	0~3	001	003	001	003	001	003	002	002

(NTSC / 480i) (1/3)

Item No.	Item name	Variable range	NTSC				480i			
			Standard		Theater		Standard		Theater	
			High	Low	High	Low	High	Low	High	Low
S10	R DRIVE	0～255	—	075	—	—	—	077	—	—
S11	R DRIVE OFFSET	-128～+127	+004	000	+002	+006	+004	000	+003	-004
S12	B DRIVE	0～255	—	073	—	—	—	076	—	—
S13	B DRIVE OFFSET	-128～+127	+005	000	-012	-017	+005	000	-010	-018

(480p / 720p / 1080i) (2/3)

Item No.	Item name	Variable range	480p				720p / 1080i			
			Standard		Theater		Standard		Theater	
			High	Low	High	Low	High	Low	High	Low
S10	R DRIVE	0～255	—	—	—	—	—	078	—	—
S11	R DRIVE OFFSET	-128～+127	+004	000	-005	-004	+004	000	-006	+005
S12	B DRIVE	0～255	—	—	—	—	—	072	—	—
S13	B DRIVE OFFSET	-128～+127	+006	000	-002	-014	+005	000	-013	-010

(HDCP) (3/3)

Item No.	Item name	Variable range	HDCP			
			Standard		Theater	
			High	Low	High	Low
S10	R DRIVE	0～255	—	—	—	—
S11	R DRIVE OFFSET	-128～+127	+004	000	-006	+005
S12	B DRIVE	0～255	—	—	—	—
S13	B DRIVE OFFSET	-128～+127	+005	000	-010	-013

(NTSC / 480i / 480p / 720p / 1080i)

Item No.	Item name	Variable range	NTSC		480i		480p / 720p / 1080i		HDCP	
			Standard	Theater	Standard	Theater	Standard	Theater	Standard	Theater
S14	R CUT OFF	0～255	232	—	232	—	232	—	—	—
S15	R CUT OFF OFFSET	-128～+127	000	+003	000	+004	000	-007	000	+007
S16	G CUT OFF	0～255	040	—	040	—	040	—	—	—
S17	G CUT OFF OFFSET	-128～127	000	000	000	000	000	000	000	000
S18	B CUT OFF	0～255	048	—	041	—	054	—	—	—
S19	B CUT OFF OFFSET	-128～+127	000	-004	000	+002	000	-005	000	-005
S20	R CUT OFF SW	0～3	000	—	000	—	000	—	—	—
S21	B CUT OFF SW	0～3	001	—	001	—	001	—	—	—

(NTSC / 480i / OTHERS SIGNAL)

Item No.	Item name	Variable range	NTSC	480i	OTHERS SIGNAL
S22	BLACK GRAD CORR START LEVEL	0～15	015	015	015
S23	BLACK GRAD CORR GAIN	0～15	008	008	008
S24	WHITE GRAD CORR START LEVEL	0～15	000	000	000
S25	WHITE GRAD CORR GAIN	0～15	015	015	015
S26	WHITE CHARA CORR START LEVEL	0～15	002	000	002
S27	WHITE CHARA CORR GAIN	0～15	004	002	000

Item No.	Item name	Variable range	Standard	Theater
S28	ABL GAIN	0～15	015	015
S29	ABC START	0～15	015	015
S30	ACL GAIN	0～15	015	015
S31	ACL START	0～15	000	00
S32	CONTRAST LINK	0 / 1	000	000
S33	BLACK GRADIATION CORRECTION OFF	0 / 1	000	001
S34	WHITE GRADIATION CORRECTION OFF	0 / 1	000	001

(NTSC / 480i / 480p / 720p / 1080i / HDCP)

Item No.	Item name	Variable range	NTSC / 480i	480p	720p / 1080i	HDCP	
						480p	720p / 1080i
S35	TINT HD / NTSC	0 / 1	001	001	000	001	000

Item No.	Item name	Variable range	Standard	Theater
S36	ABL OFF	0 / 1	000	000
S37	ACL OFF	0 / 1	000	000
S38	DC TRANSMIT POLARITY	0 / 1	001	000
S39	DC TRANSMIT CORR	0 / 1	000	000
S40	BLANKING ON / OFF	0 / 1	000	000

(NTSC / 480i / OTHERS)

Item No.	Item name	Variable range	NTSC		480i		OTHERS SIGNAL	
			Standard	Theater	Standard	Theater	Standard	Theater
S41	DC REPRODUCE RATE	0～255	160	140	160	120	160	120

Item No.	Item name	Variable range	SPLIT	Regular	Theater	OTHERS SIGNAL
S42	ACL CONTROL	0～255	064	072	000	072

Item No.	Item name	Variable range	Setting value	
			Standard	Theater
S43	CONTRAST LOWER LIMIT	-128～+127	-030	-020
S44	CONTRAST UPPER LIMIT	-128～+127	+013	+013
S45	BRIGHT LOWER LIMIT	-128～+127	-020	-020

(NTSC / 480i / OTHERS)

Item No.	Item name	Variable range	NTSC	480i	OTHERS SIGNAL
S46	EE THEATER BRIGHT	-128～+127	000	000	000
S47	EE THEATER CONTRAST	-128～+127	+020	+020	+020

(ALL SIGNAL)

Item No.	Item name	Variable range	Setting value
S48	BRIGHT EE CONT. CORRECTION	0～31	008
S49	REFRAIN EE CONT. CORRECTION	0～31	027
S50	REFRAIN EE BRIGH OFFSET CORR (MAX)	0～127	004
S51	BRIGHT EE ACL CORR. COEFF.	0～255	085
S52	REFRAIN EE ACL CORR. COEFF.	0～255	140
S53	No use	0 / 1	000
S54	No use	0 / 1	000
S55	No use	0 / 1	000
S56	No use	0 / 1	000
S57	No use	0 / 1	000

■OTHERS

Item No.	Item name	Variable range	Setting value	Item No.	Item name	Variable range	Setting value
F01	EEPROM Ver 1	0～255	053	F32	DIRECT SELECT 2 PIC.	0 / 1	000
F02	EEPROM Ver 2	0～255	001	F33	CAPTION OSD OSCSELECT	0～7	002
F03	H.LINE ON (BRIGHT)	0～255	133	F34	4 PIC. HIGH SPEED SEARCH	0～255	225
F04	H.LINE OFF (BRIGHT)	0～255	137	F35	4 PIC. AGC REFLESH	0～255	000
F05	H.LINE CONTRAST	0～127	000	F36	4 PIC. HIGH SPEED WAIT 1	0～255	040
F06	C38 / C41 SW	0 / 1	001	F37	4 PIC. HIGH SPEED WAIT 2	0～255	020
F07	MODEL SELECT	0～255	000	F38	4 PIC. HIGH SPEED WAIT 3	0～255	040
F08	————	———	———	F39	VSM SHIPPING MODE	0 / 1	000
F09	AUTO SCROLL ADJUST 1	0～15	002	F40	DVD	0～3	000
F10	AUTO SCROLL ADJUST 2	0～15	004	F41	2 PICTURE 16:9 MODE	0 / 1	001
F11	AUTO SCROLL ADJUST 3	0～15	004	F42	V/C DECODE H.MASK SETTING	0 / 3	002
F12	AUTO SCROLL ADJUST 4	0～15	005	F43	POWER OFF WHITE	0 / 1	000
F13	AUTO SCROLL ADJUST 5	0～15	006	F44	WHITE BACK ON/OFF	0 / 1	000
F14	AUTO SCROLL ADJUST 6	0～15	007	F45	————	———	———
F15	AUTO SCROLL ADJUST 7	0～15	007	F46	————	———	———
F16	Not use	0 / 1	000	F47	————	———	———
F17	Not use	0 / 1	000	F48	————	———	———
F18	Not use	0 / 1	000	F49	————	———	———
F19	Not use	0 / 1	000	F53	S / N (RF) CORR.WIDTH	0～255	000
F20	Not use	0 / 1	000	F54	S / N (RF) CORR.START	0～255	000
F21	Not use	0 / 1	000	F55	S / N (BS) CORR.WIDTH	0～255	000
F22	Not use	0 / 1	000	F56	S / N (BS) CORR.START	0～255	001
F23	Not use	0 / 1	000	F57	S / N (COMP.) CORR.WIDTH	0～255	000
F24	V-CHIP ON/OFF (CANADA)	0 / 1	001	F58	S / N (COMP.) CORR.START	0～255	000
F25	EARTH MAGNETIC CORR. PICTURE	0～127	127	F59	S / N (S) CORR.WIDTH	0～255	000
F26	OSD OFFSET (480p / 720p) (HDCP / 480p)	0～63	033	F60	S / N (S) START	0～255	000
F27	OSD OFFSET (1080i / HDCP1080i)	0～63	018	F61	OCD OFFSET (HORI.)	0～127	000
F28	CH.PROGRAM SEARCH CYCLE	0～255	011	F62	ATT GAIN	0 / 1	000
F29	PIP FUNCTION ON / OFF	0 / 1	000	F63	V.HEIGHT OFFSET	-128～+127	001
F30	PIP 2 PICTURE	0 / 1	000	F64	TEXT MODE CONT.CORR.	-128～+127	000
F31	V.CHIP ON OFF	0 / 1	001				

(1/2)

Item No.	Item name	Variable range	Setting value				
			NTSC	480i	480p	1080i	720p
F50	SEP.LEVEL	0～3	000	002	002	002	002
F51	CLAMP PLUS	0 / 1	000	000	000	000	000
F52	HD PHASE	0～63	038	035	026	039	024

(2/2)

Item No.	Item name	Variable range	Setting value			
			HDCP 480p SIZE 1	HDCP 480p SIZE 2	HDCP720p	HDCP1080i
F50	SEP.LEVEL	0～3	002	002	002	002
F51	CLAMP PLUS	0 / 1	000	000	000	000
F52	HD PHASE	0～63	042	017	047	044

ADJUSTMENT

CHECK ITEMS

Item	Measuring instrument	Test point	Adjustment part	Description
B1 POWER SUPPLY check	**Signal generator** **DC voltmeter**	**S1 connector** **5 pin:TP-91** **1 pin:TP-E(⏚)**		1. Receive a NTSC black & white signal (color off). 2. Connect the DC voltmeter to TP-91 (S1 connector 5 pin) and TP-E(⏚) (S1 connector 1 pin). 3. Confirm that the voltage is DC140V±2V.
HIGH VOLTAGE check	**Signal generator** **High voltage meter**	**CRT Anode**		1. Receive a NTSC whole black signal. 2. Connect the high voltage meter between CRT anode and GND. 3. Check that the high voltage DC 31.0kV ±1.0kV.
X-RAY PROTECTOR check	**Resistor** **6.8kΩ 1/6W** **±5%**	**S1 connector** **2 pin:X-Ray2** **3 pin:X-Ray1**		1. Receive any broadcast. 2. Connect resistor 6.8kΩ(1/6W, ±5%) between 2 pin & 3 pin of the connector S1. 3. Confirm that the X-RAY protector functions operated.

HORIZONTAL FREQUENCY ADJUSTMENT

Item	Measuring instrument	Test point	Adjustment part	Description
H. FREQUENCY adjustment	**Signal generator** **Remote control unit**		**D15 : H. FREQ.** **D19 : DEF. RST**	1. Receive any broadcast. 2. Preset from 0 to 1 for D19 <DEF. RST>. 3. While observing the screen, adjust the D15 <H. FREQ> so that an optimum horizontal synchronization is obtained. 4. After adjustment, to preset from 1 to 0 for D19 <DEF. RST>. 5. Press the MUTING key to memorize the set value.

FOCUS & BEAM SPOT ADJUSTMENT

Item	Measuring instrument	Test point	Adjustment part	Description
FOCUS & BEAM SPOT adjustment	**Signal generator** **Similar adhesive (Securing adhesive)**		**G Def. Yoke (DY)** **R Def. Yoke (DY)** **B Def. Yoke (DY)** **[Projection unit]** **R LENS FOCUS screw** **G LENS FOCUS screw** **B LENS FOCUS screw** **[Projection unit (LENS ASS'Y)]** **R SCREEN VR** **G SCREEN VR** **B SCREEN VR** **[FOCUS PACK]** **4 pole magnet** **2 pole magnet** **[Projection unit (CRT neck)]** **R FOCUS VR** **G FOCUS VR** **B FOCUS VR** **[FOCUS PACK]**	1. Receive a cross-hatch signal. 2. Press the ASPECT and select the FULL mode. 3. If the picture tilted, adjust the R, G and B DY position to mark straight horizontal line. ■ **LENS FOCUS** 4. Makes a red single color. **NOTE** : When making a single color, It squeezes SCREEN VR in each one, or it does a lid to the lens in of the adjustment color and it makes it single color. 5. By turning the LENS FOCUS screw (in LENS ASS'Y), for optimum focus at the screen center. Check for absence of difference in the peripheral focus. If the peripheral focus is poor, slightly shift the center focus to obtain overall balanced focus. 6. In the same manner, produce green and blue single color and adjust their respective focus. 7. After adjustment, it fixes a screw. **NOTE** : There is not a difference in the focus in the top and the bottom, on either side, in the diagonal. When the difference of the focus is big, it removes a main lens, and it puts a washer between the main lens and the coupler and it adjusts it. ■ **BEAM SPOT** 8. Receive a dot pattern signal. 9. Makes a red single color. **NOTE** : When making a single color, It squeezes SCREEN VR in each one, or it does a lid to the lens in of the adjustment color and it makes it single color. 10. Turn the R FOCUS VR to set the dot diameter to about ϕ 30mm. 11. Turn the 4 pole magnet of the projection unit CRT neck and to where the dots at the screen center are nearly circular. 12. Return the R FOCUS VR to its original position (just focus). 13. Turn the 2 pole magnet of the CRT neck to minimize expansion of the dots. 14. In the same manner, adjust for the green and blue single color focus. 15. Secure the 4 and 2 pole magnets with similar adhesive. ■ **CRT FOCUS** 16. Receive a cross hatch signal. 17. Makes a red single color. **NOTE** : When making a single color, It squeezes SCREEN VR in each one, or it does a lid to the lens in of the adjustment color and it makes it single color. 18. Adjust the R FOCUS VR for optimum focus at the position indicated in the figure. 19. In the same manner, adjust for the green and blue single color focus. 20. After adjustment, return the SCREEN VRs to their original positions. **NOTE** : **When moving screen VR, always return to original.**

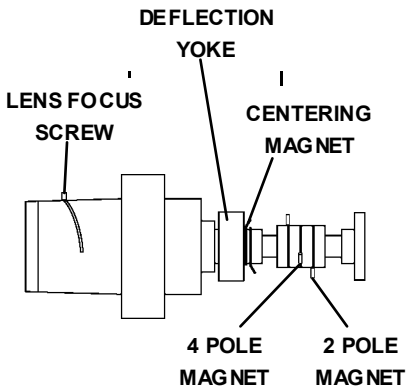

PROJECTION UNIT & LENS ASS'Y (CRT adjustment location)

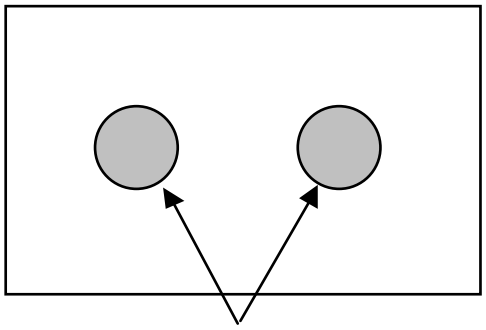

CRT FOCUS adjustment point

CONVERGENCE & DEFLECTION ADJUSTMENT

- **The adjustment using the remote control unit is made on the basis of the initial setting values.**
- **The setting values which adjust the screen to the optimum condition can be different from the initial setting values.**
- **At first the adjustment in FULL mode should be done, then the data for the other ASPECT mode is corrected in the respective value at the same time.**

FLOWCHART OF ADJUSTMENT

CAUTION

All adjustments of the DEFLECTION circuit for this model should be carried out under the status without convergence operation.
To enter the status without convergence operation turn the power on while pressing the service switch **S801** on the CONVERGENCE PWB.
As a result, you can get the screen as shown in Fig.1. Adjust the DEFLECTION circuit in order of the steps indicated by the downward arrows.
Note: When every adjustment of the DEFLECTION circuit has completed, start the adjustment of convergence.

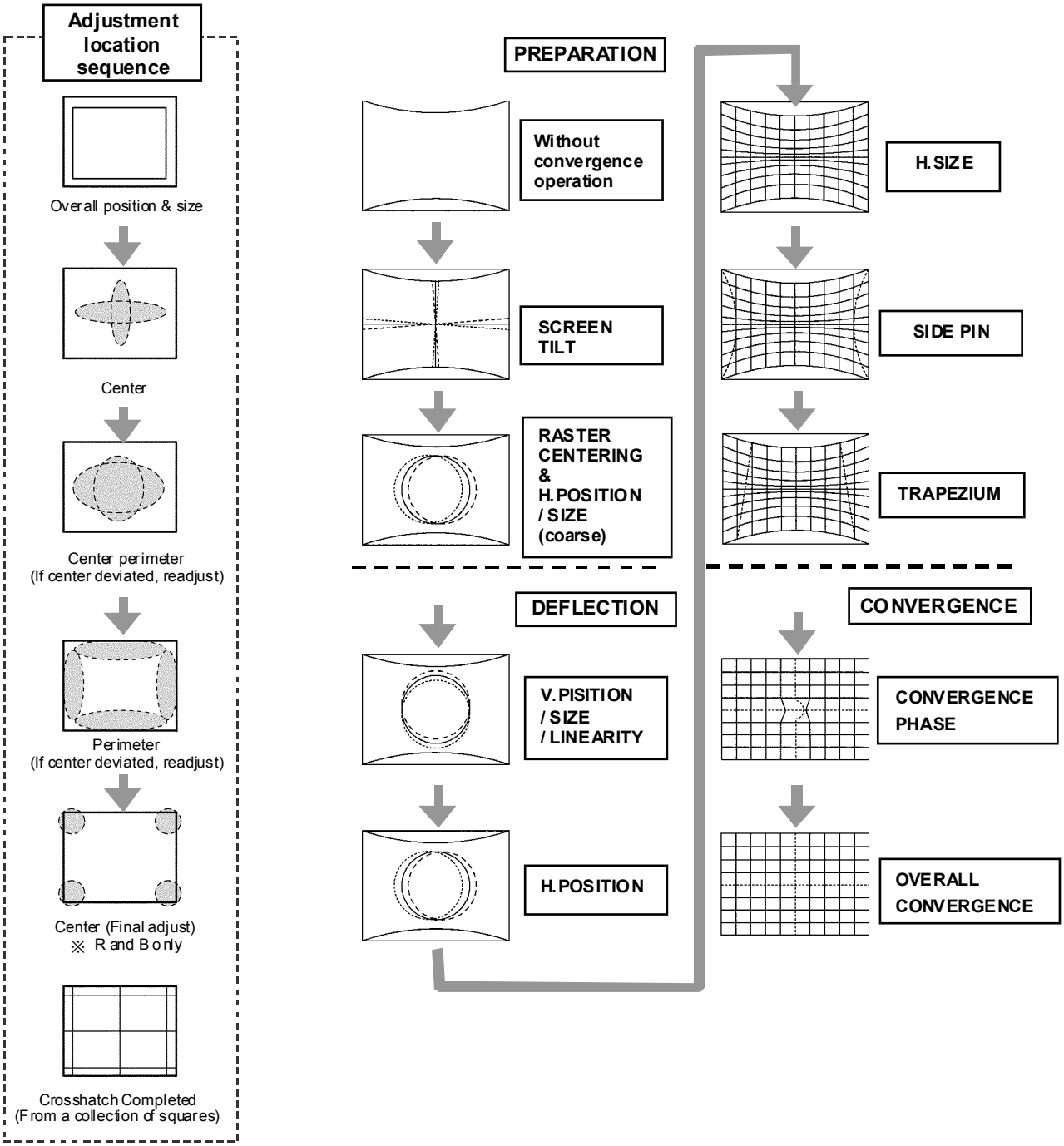

Item	Measuring instrument	Test point	Adjustment part	Description
SCREEN TILT adjustment	**Signal generator**		**SERVICE SW (S801) [CONVERGENCE PWB]** **G DEF. YOKE** **R DEF. YOKE** **B DEF. YOKE** **[PROJECTION UNIT]**	• Confirm correct FOCUS adjustment. 1. It pushes a power switch while pushing SERVICE SW **S801** on the CONVERGENCE PWB then it makes picture without convergence operation. 2. Receive a NTSC cross-hatch signal. 3. Makes a green single color. **NOTE** : When making a single color, It squeezes SCREEN VR in each one, or it does a lid to the lens in the adjustment color and it makes it single color. 4. Temporarily secure the G deflection yoke to the top of the neck and adjust the tilt of the deflection yoke so that the horizontal line at the center becomes flat. After adjustment, fasten the temporal screw. 5. Adjust the tilt of the R and B deflection yokes in the same manner as for green. **NOTE** : Make sure that the adjustment of CRT FOCUS is optimized at the center and at the fringe of the center in turn. If the proper adjustment has not been done, adjust FOCUS VR again.
RASTER CENTERING & H. POSITION / SIZE (coarse) adjustment	**Signal generator** **Remote control unit**		**SERVICE SW (S801) [CONVERGENCE PWB]** **G CENTERING magnet** **R CENTERING magnet** **B CENTERING magnet** **[DEF. YOKE]** **D03 : H. SIZE** **D14 : H. CENTER**	1. It pushes a power switch while pushing SERVICE SW **S801** on the CONVERGENCE PWB then it makes picture without convergence operation. 2. Receive a NTSC circle & cross-hatch signal. 3. Makes a green single color. **NOTE** : When making a single color, it squeezes SCREEN VR in each one, or it does a lid to the lens in the adjustment color and it makes it single color. 4. Select 1.PICTURE/SOUND from SERVICE MENU. 5. Select D03 < H. SIZE > and shorten the level until and perpendicular amplitude of vibration with until the blanking in Left and Right and on either side can be seen. 6. Select D14 < H. CENTER > and adjust horizontal position to make the screen center and signal center. 7. Select D03 < H. SIZE > and adjust horizontal size to make screen picture approx. 92% of H-SIZE. 8. Press the MUTING key and memorize the set value. 9. Adjust the G CENTERING magnet to make horizontal and vertical line center as mechanical center of screen. 10.Red and blue color, too, are reflected by it. 11.Using R CENTERING magnet and B CENTERING magnet, adjusts for the line of the red and the blue to become the position of the left figure.

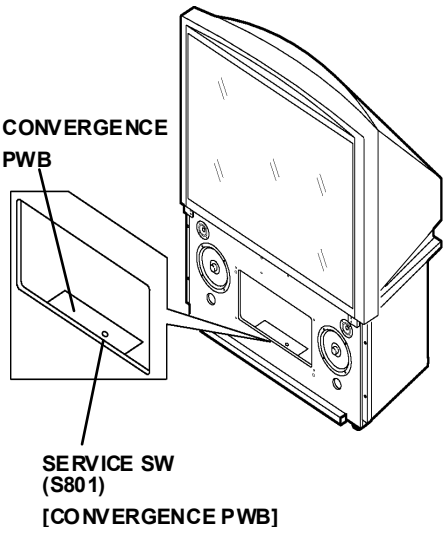

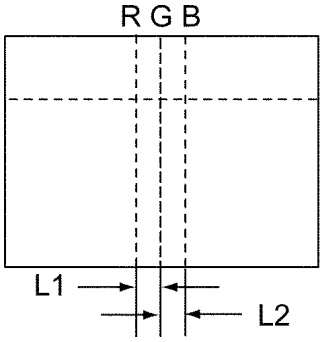

L1=30mm L2=45mm

DEFLECTION CIRCUIT ADJUSTMENT

Item	Measuring instrument	Test point	Adjustment part	Description
V. POSITION / SIZE / LINEARITY adjustment	**Signal generator** **Remote control unit**		**D01 : V. SIZE** **D05 : V. LINEARITY** **D06 : V. CENTER** **SERVICE SW (S801) [CONVERGENCE PWB]**	● **To memorize every time after finish adjustment on each mode.** 1. It pushes a power switch while pushing SERVICE SW **S801** on the CONVERGENCE PWB then it makes picture without convergence operation. 2. Press SERVICE SW **S801** again. 3. Press the ASPECT key and select the FULL mode. 4. Receive a NTSC circle pattern signal. 5. Select 1.PICTURE/SOUND from the SERVICE MENU. 6. Select D01＜V. SIZE＞, D05＜V. LINEARITY＞, D06＜V. CENTER＞ with the FUNCTION (▲/▼) key. 7. Adjust D06, D02 to make **A = B** (precision ±2mm), and adjust to make **C = 75mm** 8. Press the MUTING key and memorize the set value. **NOTE** : Do not adjust D04＜V. S-CORRECTION＞, if it is different vertical position after adjust vertical linearity, to adjust vertical position.
H. POSITION adjustment			**D14 : H. CENTER**	9. Select D14＜H. CENTER＞ with FUNCTION (▲/▼) key. 10. Adjust D14 with FUNCTION (◀/▶) key and make **D = E** as shown figure. 11. Press the MUTING key and memorize the set value.
H. SIZE adjustment			**D03 : H. SIZE**	12. Receive a NTSC cross-hatch signal. 13. Select D03＜H. SIZE＞ with the FUNCTION (▲/▼) key. 14. Adjust D03 and make sure that the vertical screen size of the picture size is 92%. 15. Press the MUTING key and memorize the set value.

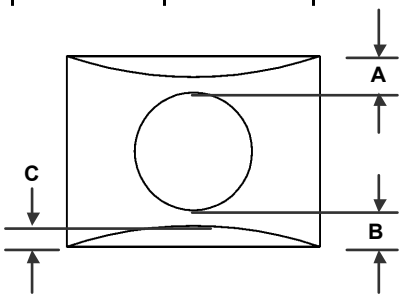

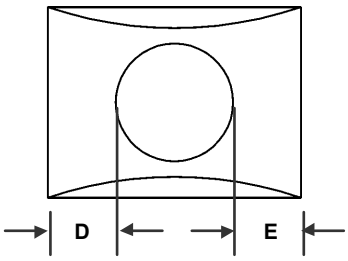

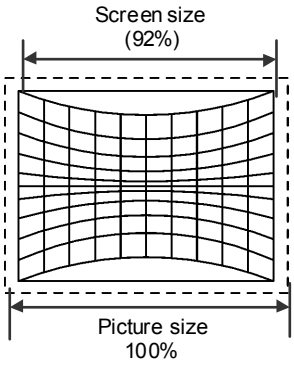

Item	Measuring instrument	Test point	Adjustment part	Description
SIDE PIN adjustment			**D02: EW PARABOLA** **D08: EW CORNER LOWER** **D09: EW CORNER UPPER**	16. Select D02<EW PARABOLA>, D08<EW CORNER LOWER>, D09＜EW CORNER UPPER＞ with FUNCTION (▲/▼) key respectively. 17. Adjust D02, D08, D09 with FUNCTION (◀/▶) key and make the vertical lines at the left and right edges of the screen straight. 18. Press the MUTING key and memorize the set value. **NOTE** : After making adjustments, confirm that the horizontal position is properly adjusted. If the horizontal is out of alignment, readjust it. Adjust H SIZE & SIDE PIN reparably.
TRAPEZIUM adjustment			**D07: TRAPEZIUM**	19. Select D07＜TRAPEZIUM＞ with the FUNCTION (▲/▼) key. 20. Adjust D07 with (◀/▶)key and bring the vertical lines at the right and left edges of the screen parallel. 21. Press the MUTING key and memorize the set value.

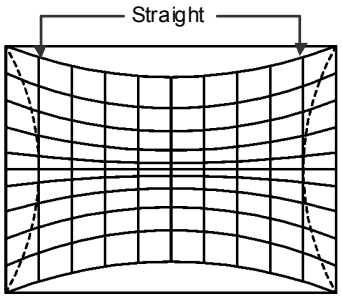

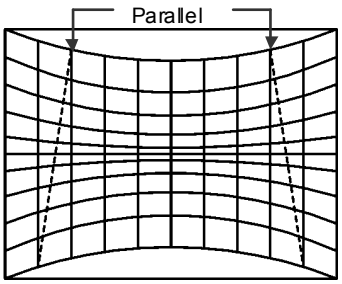

CONVERGENCE ADJUSTMENT

Item	Measuring instrument	Test point	Adjustment part	Description
CONVERGENCE PHASE adjustment	**Signal generator** **Remote control unit**		**SERVICE SW (S801) [CONVERGENCE PWB]**	1. Receive a NTSC cross-hatch signal. 2. Press the SERVICE SW **S801** on the CONVERGENCE PWB to enter the dynamic adjustment mode. 3. Press the 100+ key to select the green line. 4. Using the FUNCTION (▲) (CH+) key, intentionally expand the blinking horizontal green line as shown in the **Fig. 1**. 5. Press the SPLIT key to enter the phase adjustment mode. 6. Using the FUNCTION (◀/▶) key, adjust the screen so that the point "**A**" is located between the cross-point of the dotted line and the vertical line on the left side as shown in the **Fig. 2**. 7. Press the SPLIT key again to return to the dynamic adjustment mode. 8. Press the 100+ key to select the green line. 9. Return the point "**A**", which was intentionally expanded, to its original position. 10. Using the FUNCTION (◀) key, intentionally expand the vertical line as shown in the **Fig. 3**. 11. Press the SPLIT key to enter the phase adjustment mode. 12. Using the FUNCTION (▲/▼) key, adjust the screen so that the peak of the point "**B**" meets with the adjacent dotted line as shown in the **Fig. 4**. 13. Press the SPLIT key again to return to the dynamic adjustment mode. 14. Press the 100+ key to select the vertical green line. 15. Using the FUNCTION (◀) key, return the point "**B**", which was intentionally expanded, to its original position. 16. Press the SPLIT key again to enter the phase adjustment mode. 17. Using the 2(up) / 4(left) / 5(down) / 6(right) key, adjust the screen so that the cross-point of the dotted line is positioned at the screen center on the screen. (**Fig. 5**) 18. Press the SELECT key twice and memorize the set value.

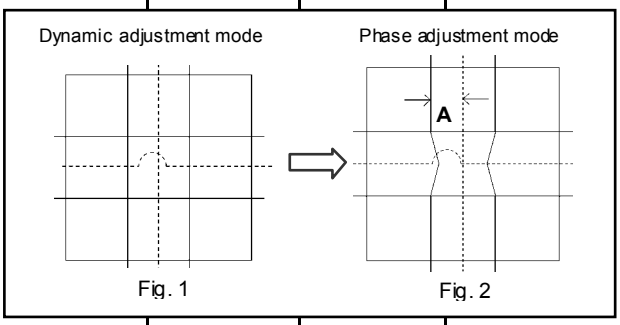

Fig. 1 Fig. 2

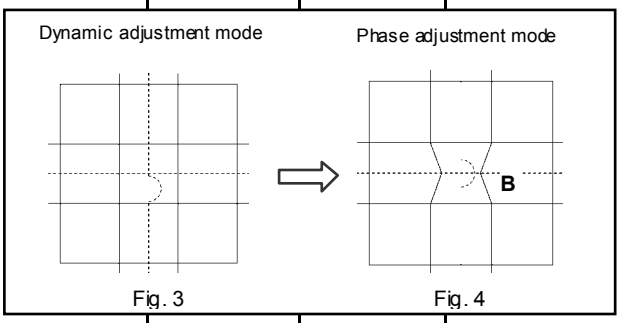

Fig. 3 Fig. 4

REMOTE CONTROL KEY POSITION

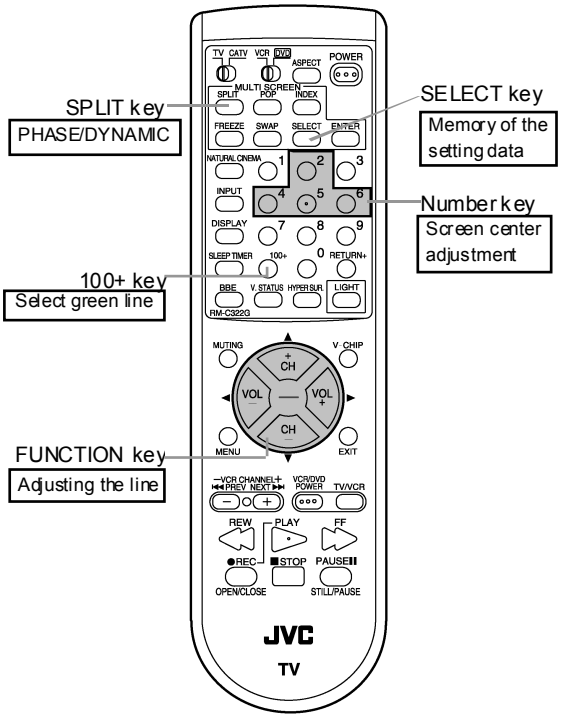

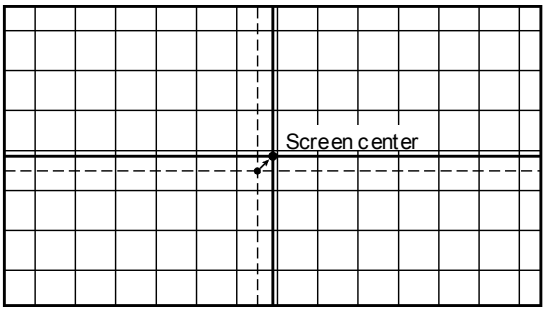

Fig. 5

Item	Measuring instrument	Test point	Adjustment part	Description
OVERALL CONVERGENCE adjustment	**Signal generator** **Remote control unit**		**SERVICE SW (S801) [CONVERGENCE PWB]**	1. Receive a NTSC cross-hatch signal. 2. Press the SERVICE SW **S801** on the CONVERGENCE PWB to enter the dynamic adjustment mode and a cross-hatch signal appears. 3. Press the 100+ key to select green color. Then the center lines of the vertical and horizontal lines of the cross-hatch pattern will flash. 4. Press MENU key to let green cross-hatch pattern to appear on screen. 5. Using the 2(up) / 4(left) / 5(down) / 6(right) key, move the flashing line. 6. Using the FUNCTION (▲/▼/◀/▶) key, adjust the position on the screen as shown in Fig.1. 7. Sometime press INDEX key to do interpolation process. 8. Press 0 key to select red color. Then the center lines of the vertical and horizontal lines of the cross-hatch pattern will flash. 9. Repeat steps 5 ～ 8. 10. Press RETURN+ key to select blue color. Then the center lines of the vertical and horizontal lines of the cross-hatch pattern will flash. 11. Repeat steps 5 ～ 8. 12. After finishing the adjustment, press SELECT key twice to memorize the setting data. 13. Press 0 keys five times and it changes a screen to the H7×V5 adjustment point mode. 14. Repeat steps 3 ～ 12. 15. Press RETURN+ keys five times and it changes a screen to the H13×V7 adjustment point mode. 16. Repeat steps 3 ～ 12. 17. After adjustment, press the SERVICE SW **S801** again. **Note:** For overall convergence adjustment, the following should be done in turn : (1) H3×V3 coarse adjustment mode (2) H7×V5 coarse adjustment mode (3) H13×V7 fine adjustment mode ● You are unable to return to the H3×V3 mode from the H7×V5 and H13×V7 modes, respectively.

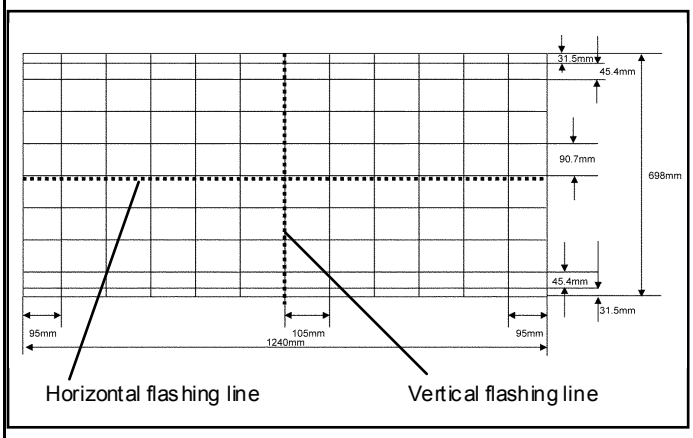

Fig. 1

REMOTE CONTROL KEY POSITION

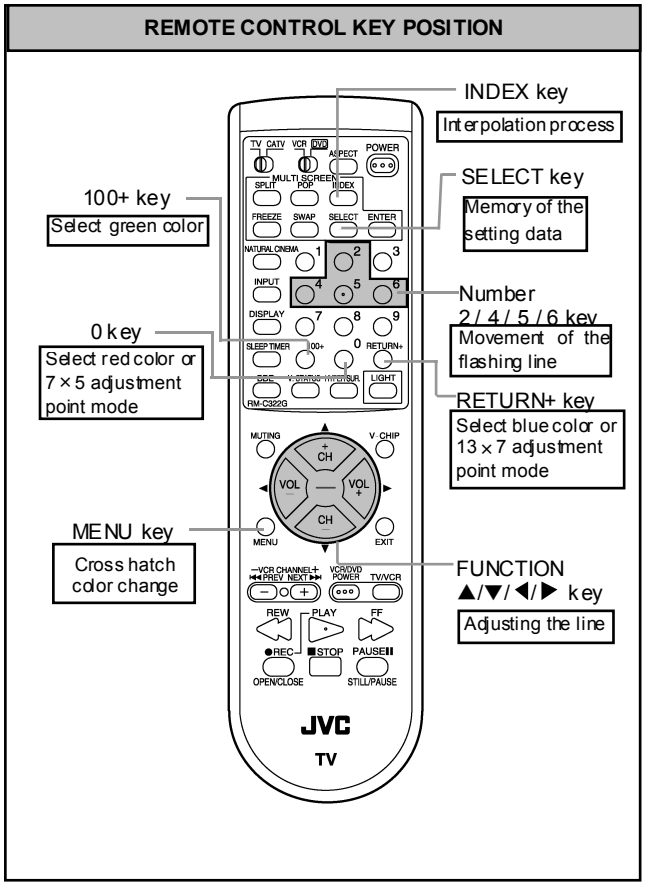

VIDEO ADJUSTMENT

Item	Measuring Instrument	Test point	Adjustment Item	Description
A-D CONVERTER OFFSET adjustment	**Signal generator** **Oscilloscope** **Remote control unit**	**KG [G CRT SOCKET PWB]** **KB [B CRT SOCKET PWB]** **KR [R CRT SOCKET PWB]**	**ADM012: R OFFSET** **ADM013: G OFFSET** **ADM014: B OFFSET**	1. Receive a NTSC whole black (0%) signal. 2. Select the STANDARD mode for the VIDEO STATUS. 3. Select REGULAR mode of ASPECT mode. 4. Select that COLOR TEMP in set at the LOW mode. 5. Connect the oscilloscope to KG (G cathode) on the G CRT SOCKET PWB. 6. Select 8.PP from the SERVICE MENU. 7. Select ADM013<G OFFSET>. 8. Adjust ADM013 so that the central 0% signal portion and the non-signal portion of both sides may become the same voltage. 9. Connect the oscilloscope to KB (B cathode) on the B CRT SOCKET PWB. 10. Select ADM014<B OFFSET>. 11. Adjust ADM014 so that the central 0% signal portion and the non-signal portion of both sides may become the same voltage. 12. Connect the oscilloscope to KR (R cathode) on the R CRT SOCKET PWB. 13. Select ADM012<R OFFSET>. 14. Adjust ADM012 so that the central 0% signal portion and the non-signal portion of both sides may become the same voltage. 15. Press the MUTING key and memorize the set values. 16. Input 480i / 480p / 750p / 1080i component whole black signal from COMPONENT VIDEO terminal respectively. 17. Set the data of ADM012, ADN013 and ADM014, which were obtained in the adjustments above, by each signal. 18. Press the SPLIT key to display two pictures. 19. Input NTSC / 480I / 480p / 750p / 1080i component whole black signal to the MAIN picture, respectively. 20. Set the data of ADM012, ADN013 and ADM014 in the same manner as for step 16 above. 21. Press the POP key to display four pictures. 22. Regardless of the type of signal, input a signal. 23. Set the data of ADM012, ADN013 and ADM014 in the same manner as for step 16 above.

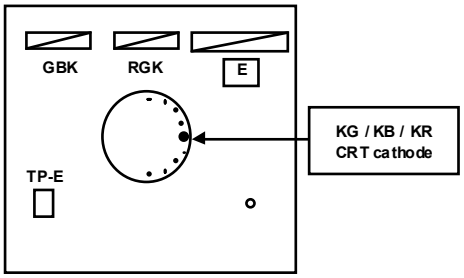

CRT SOCKET PWB

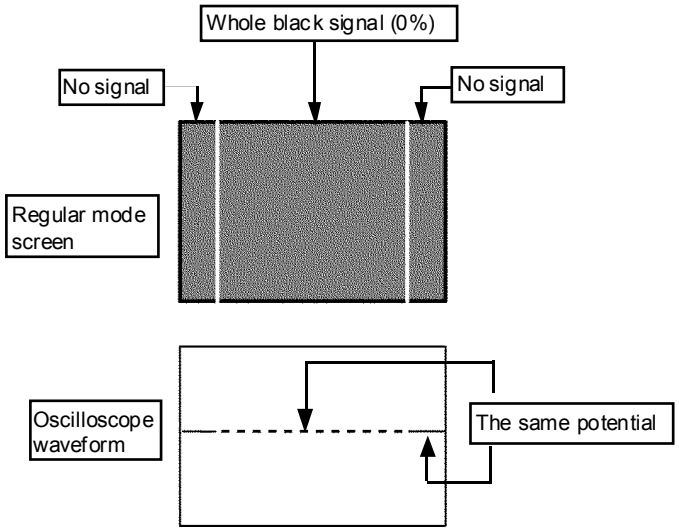

Item	Measuring Instrument	Test point	Adjustment Item	Description
WHITE BALANCE (Low Light) adjustment	**Signal generator** **Oscilloscope** **Remote control unit**	**TP-R [R CRT SOCKET PWB]** **TP-G [G CRT SOCKET PWB]** **TP-B [B CRT SOCKET PWB]**	**S14: R CUTOFF** **S16: G CUTOFF** **S18: B CUTOFF** **S20 : R CUTOFF SW** **S21 : B CUTOFF SW** **R SCREEN VR** **G SCREEN VR** **B SCREEN VR** **[FOCUS PACK]**	1. Receive NTSC black & white signal (include 0%). 2. Select the STANDARD mode for the VIDEO STATUS. 3. Select the COLOR TEMP in set at the LOW mode. 4. Connect the oscilloscope to TP-G. 5. Adjust S16 <G CUTOFF> to mach 0% DC level to 180V. 6. Press the MUTING key to memorize the set value. **NOTE** : Adjusting S16, change the only up. If DC level is low, adjust S03 <SUB BRIGHT>. 7. Input 480i component black level pattern signal from COMPONENT VIDEO terminal and input the value adjusted at NTSC to S16 <G CUTOFF>. 8. Press the MUTING key and memorize the set values. 9. Input 1080I component black level pattern signal from COMPONENT VIDEO terminal and input the value adjusted at NTSC to S16 <G CUTOFF>. 10. Press the MUTING key and memorize the set values. 11. In case of TP-R, TP-B, repeat step 4 ～ 6 above. If the value of S14 or S18 is maximum or minimum, change S20 <R CUTOFF SW> or S21 <B CUTOFF SW> and then adjust S14 or S18. 12. Adjust each R / G / B screen VR and glimmer +3% point of each R / G / B on the screen. 13. Receive the NTSC black & white pattern signal (color off). 14. Select the STANDARD mode for the VIDEO STATUS. 15. Select that COLOR TEMP is set at the LOW mode. 16. Select the 3.LOW LIGHT mode from the SERVICE MENU. 17. Press the 0 key, then setting values appear. 18. Increase the bright level to confirm low-light with FUNCTION key (▶). 19. Adjust using 4 / 7(R CUTOFF), 6 / 9 (B CUTOFF) key of number key so that a black portion may become black. 20. Press the MUTING key and memorize the set values. 21. Input 480i component black & white pattern signal from COMPONENT VIDEO terminal. 22. Repeat steps 16 ～ 20 above. 23. Input 1080i component black & white signal from COMPONENT VIDEO terminal. 24. Repeat steps 16 ～ 20 above.

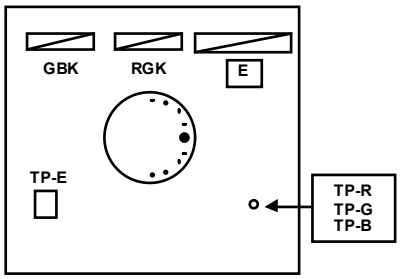

CRT SOCKET PWB

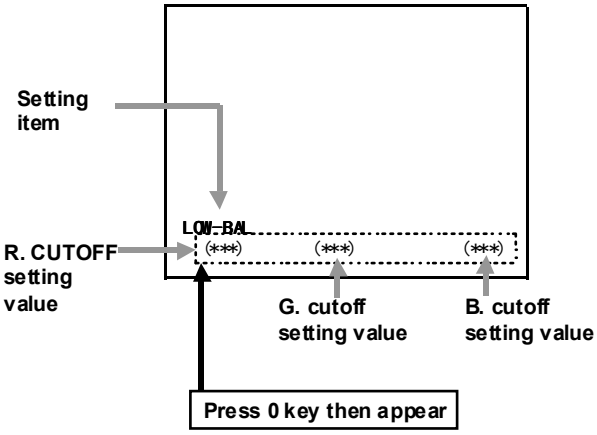

Setting item	Setting value		
	NTSC	480i	1080i
S14	232	232	232
S16	040	040	040
S18	048	041	050
S20	000	000	000
S21	001	001	001

REMOTE CONTROL UNIT

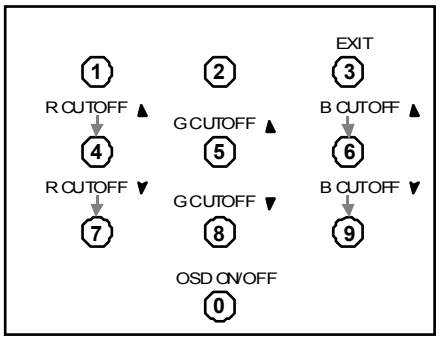

Item	Measuring Instrument	Test point	Adjustment Item	Description
WHITE BALANCE (High Light) adjustment	**Signal generator** **Remote control unit**		**S10 : R DRIVE** **S12 : B DRIVE**	1. Receive the NTSC black & white signal (color off). 2. Select the STANDARD mode on the VIDEO STATUS. 3. Select that COLOR TEMP is set at the LOW mode. 4. Select the 4.HIGH-LIGHT, and set the initial setting values of the WHITE BALANCE (S10 & S12 of HIGH LIGHT) on the SERVICE MENU. 5. Press the 0 key, then setting values appear. 6. Adjust using 4 / 7 (R DRIVE), 6 / 9 (B DRIVE) key of number keyso that the natural white should be visible. 7. Input the 480i component black & white signal from COMPONENT VIDEO terminal. 8. Repeat steps 4 ～ 6 above. 9. Input the 1080i component black & white signal from COMPONENT VIDEO terminal. 10. Repeat steps 4 ～ 6 above. 11. Press the MUTING key and memorize the set values.

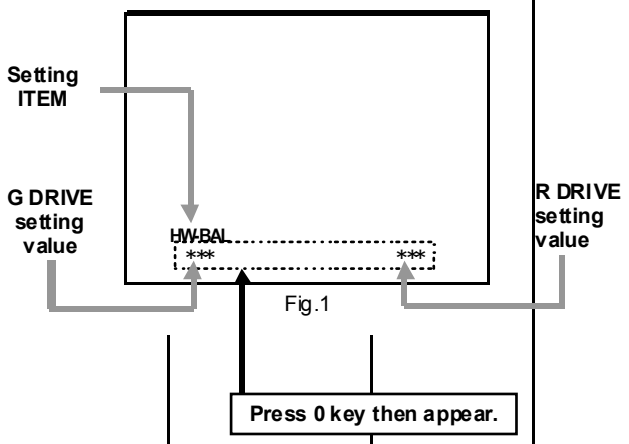

Fig.1

INITIAL SETTING VALUE

Item	Setting value (STANDARD LOW)		
	NTSC	480i	1080i
S10	075	077	078
S12	073	076	072

REMOTE CONTROL UNIT

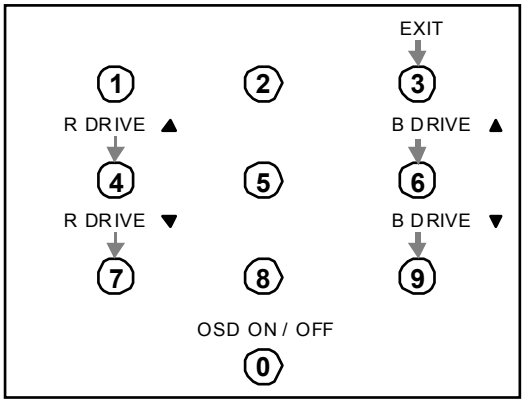

Fig.2

Item	Measuring Instrument	Test point	Adjustment Item	Description
SPLIT WHITE BALANCE (High Light) adjustment	**Signal generator** **Remote control unit**		**ADS012 : R OFFSET** **ADS014 : B OFFSET**	1. Select SPLIT mode. 2. Receive the NTSC black & white signal both the pictures. 3. Select 8.PP from SERVICE MENU. 4. Select ADS012＜R OFFSET＞ and ADS014＜B OFFSET＞ with FUNCTION (▲/▼) key. 5. Adjust ADS012 and ADS014, so that a SUB screen may become the same as a MAIN screen. (Fig.1). 6. Press the MUTING key and memorize the set values.

TWIN PICTURE

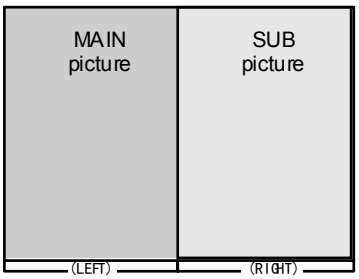

Fig.1

Item	Measuring Instrument	Test point	Adjustment Item	Description
SUB BRIGHT adjustment	**Signal generator** **Remote control unit**		**S03 : SUB BRIGHT**	1. Receive the NTSC black & white signal. 2. Select the STANDARD mode on the VIDEO STATUS. 3. Select that COLOR TEMP is set at the LOW mode. 4. Select 1.PICTURE/SOUND from SERVICE MENU. 5. Select S03＜SUB BRIGHT＞ with FUNCTION (▲/▼) key. 6. Set the initial setting value with the FUNCTION (◀/▶) key. (Table1) 7. Adjust S03, not to flash part of black on the screen. 8. Press the MUTING key and memorize the set values. 9. Select THEATER / LOW white balance, and then repeat steps 4 ～ 8 above. 10. Input 480i component black & white signal from COMPONENT VIDEO terminal 11. Select STANDARD / LOW mode, and then repeat steps 4 ～ 8 above. 12. Select THEATER / LOW mode, and then repeat steps 4 ～ 8 above. 13. Input 1080i component black & white signal from COMPONENT VIDEO terminal 14. Select STANDARD / LOW mode, and then repeat steps 4 ～ 8 above. 15. Select THEATER / LOW mode, and then repeat steps 4 ～ 8 above.

S03 : SUB BRIGHT

Item \ Signal	INITIAL SETTING VALUE					
	NTSC		480i		1080i	
	STANDARD	THEATER	STANDARD	THEATER	STANDARD	THEATER
Setting value	133	135	130	133	131	135

Table 1

Item	Measuring Instrument	Test point	Adjustment Item	Description
SUB CONTRAST adjustment	**Signal generator** **Remote control unit**		**S04 : SUB CONT.**	1. Receive the NTSC black & white signal. 2. Select the STANDARD mode on the VIDEO STATUS. 3. Select that COLOR TEMP is set at the LOW mode. 4. Select 1.PICTURE/SOUND from SERVICE MENU. 5. Select S04＜SUB CONT＞ with FUNCTION (▲/▼) key. 6. Set the Initial setting value with FUNCTION (◀/▶) key. (Table 2) 7. If the contrast is not the best with the initial setting value, make fine adjustment of the S04＜SUB CONT.＞ until you get the optimum contrast. 8. Press the MUTING key and memorize the set values. 9. Select THEATER / LOW, and then repeat steps 4.～8. above. 10. Input 480i component black & white signal from COMPONENT VIDEO terminal. 11. Repeat steps 4 ～ 9 above. 12. Receive 1080i component black & white signal from COMPONENT VIDEO terminal. 13. Repeat steps 4 ～ 9 above.

S04 : SUB CONTRAST

Signal / Item	INITIAL SETTING VALUE					
	NTSC		480i		1080i	
	STANDARD	THEATER	STANDARD	THEATER	STANDARD	THEATER
Setting value	063	046	080	047	084	046

Table 2

Item	Measuring Instrument	Test point	Adjustment Item	Description
SPLIT SUB BRIGHT / SUB CONTRAST adjustment	**Signal generator** **Remote control unit**		**ADS013 : SUB BRIGHT** **VCS008 : SUB CONTRAST**	1. Select SPLIT mode. 2. Receive the NTSC black & white signal to both pictures. 3. Select 8.PP from SERVICE MENU. 4. Select ADS013＜SUB BRIGHT＞ or VCS008＜SUB CONTRAST＞ with FUNCTION (▲/▼) key. 5. Adjust ADS013 or VCS008 to right picture is same as left picture. 6. Press the MUTING key and memorize the set values.

Item	Measuring Instrument	Test point	Adjustment Item	Description
SUB COLOR / SUB TINT / B-Y GAIN adjustment	**Signal generator** **Oscilloscope** **Remote control unit**	**TP-R** **TP-B** **TP-E(⏚)**	**S01 : SUB COLOR** **S02 : SUB TINT** **S07 : B-Y GAIN** **VCM004 : SUB COLOR** **VCM001 : SUB TINT**	**NTSC adjustment** 1. Receive the NTSC color bar. 2. Select STANDARD mode. 3. Connect the oscilloscope to TP-R. 4. Select 8.PP from SERVICE MENU. 5. Adjust VCM004 ＜SUB COLOR＞ and VCM001 ＜SUB TINT＞ to be following setting value **A**[V]. (Refer to the bellow table) 6. Select THEATER mode and then adjust S01＜SUB COLOR＞ and S02＜SUB TINT＞ to be following setting value **B**[V] same as above. (Refer to the bellow table) 7. Connect the oscilloscope to TP-B. 8. Select standard and then adjust S07＜B-Y GAIN＞ to be setting value **C**[V]. (Refer to the bellow table) 9. Select theater and then adjust S07＜B-Y GAIN＞ to be setting value **D**[V]. (Refer to the bellow table) 10. Confirm that low-light is not different after adjusting COLOR, TINT and B-Y GAIN. If it is green or magenta, to adjust low-light again. If adjust again, to set offset value again. 11. Press the MUTING key and memorize the set values.

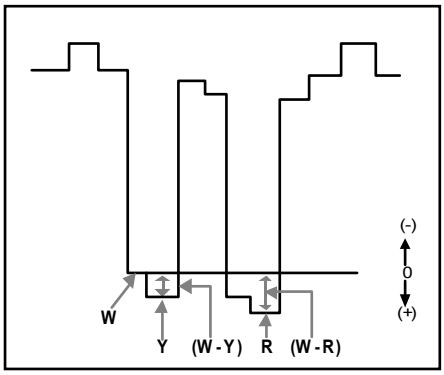

Fig. 1

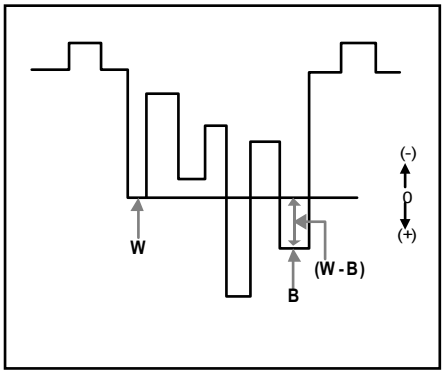

Fig. 2

Setting item / Signal	Setting value A[V]		Setting value B[V]		Setting value C[V]	Setting value D[V]
	Standard		Theater		Standard	Theater
	S01 VCM004 (W-R)	S02 VCM001 (W-Y)	S01 (W-R)	S02 (W-Y)	S07 (W-B)	S07 (W-B)
NTSC	+28	+14	+19	+7	+10	+18
1080i	+7	+6	+5	+7	-24	-9
480i	+19	+11	+7	+1	-17	+2
480p	+19	+14	+11	+2	-25	-12

Table

Component input (480i / 480p / 1080i) adjustment

1. Input the 480i component color bar from COMPONENT VIDEO terminal.
2. Select STANDARD mode.
3. Select 1.PICTURE/SOUND from SERVICE MENU.
4. Connect the oscilloscope to TP-R.
5. Adjust S01＜SUB COLOR＞ and S02＜SUB TINT＞ to be following setting value **A**[V]. (Refer to the bellow table)
6. Select THEATER and then adjust S01＜SUB COLOR＞ and S02＜SUB TINT＞ to be following setting value **B**[V] same as above. (Refer to the bellow table)
7. Connect the oscilloscope to TP-B.
8. Select STANDARD mode and then adjust S07＜B-Y GAIN＞ to be setting value **C**[V]. (Refer to the bellow table)
9. Select THEATER mode and then adjust S07＜B-Y GAIN＞ to be setting value **D**[V]. (Refer to the bellow table)
10. Input 480p component color bar from COMPONENT VIDEO terminal and then repeat steps 3 ～ 9 above.
11. Input 1080i component color bar from COMPONENT VIDEO terminal and then repeat steps 3 ～ 9 above.
12. Confirm that low-light is not different after adjusting color, Tint and B-Y Gain. If it is green or magenta, to adjust low-light again. If adjust again, to set offset value again.
13. Press the MUTING key and memorize the set values.

Item	Measuring Instrument	Test point	Adjustment Item	Description
DIGITAL INPUT (HDCP) SUB COLOR / SUB TINT/ B-Y GAIN adjustment	**Signal generator** **Remote control unit**	**TP-R** **TP-B** **TP-E(⏚)**	**S01:SUB COLOR** **S02:SUB TINT**	● COLOR, TINT, B-Y GAIN adjustment at 480p should be finished. 1. Input HDCP (digital) 480p color bar signal from DIGITAL IN terminal. 2. Select STANDARD on VIDEO STATUS. 3. Select 1.PICTURE/SOUND from SERVICE MENU. 4. Input the same value adjusted at 480p STANDARD to the setting value S01 and S02. 5. Select THEATER on VIDEO STATUS. 6. Input the same value adjusted at 480p THEATER to the setting value S01 and S02. 7. Press the MUTING key and memorize the set values. 8. Input HDCP (digital) 1080i color bar signal from DIGITAL IN terminal 9. Select STANDARD on VIDEO STATUS. 10. Input the same value adjusted at 1080i STANDARD to the setting value S01 and S02. 11. Select THEATER on VIDEO STATUS. 12. Input the same value adjusted at 1080i THEATER to setting value S01 and S02. 13. Press the MUTING key and memorize the set values.

Item	Measuring Instrument	Test point	Adjustment Item	Description
SPLIT SUB COLOR / SUB TINT ajustment	**Signal generator** **Oscilloscope** **Remote control unit**	**TP-R**	**VCS004: SUB DECODER COLOR** **VCS001: SUB DECODER TINT**	1. Select SPLIT mode. 2. Receive NTSC color bar signal to sub (right) screen and NTSC whole black signal to main (left) screen (Fig. 1). 3. Select 8.PP from SERVICE MENU. 4. Connect the oscilloscope to TP-R. 5. Adjust VCS004＜SUB DECODER COLOR＞, VCS001 ＜SUB DECODER TINT＞ to adjustment point **(A)**[V] (Fig. 2). 6. Press the MUTING key and memorize the set values.

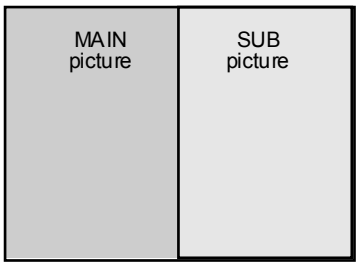

Fig. 1

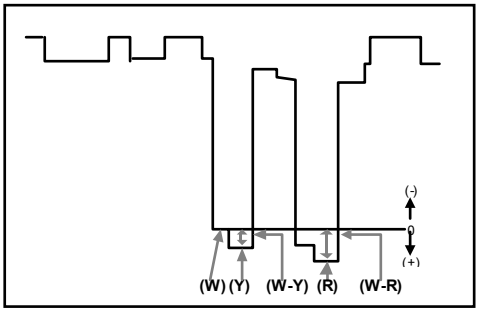

setting value

	Adjustment Point (A[V])	
(A)	**VCS004(W-R)**	**VCS001C(W-Y)**
	+22V	+12V

Fig. 2

MTS ADJUSTMENT

Item	Measuring Instrument	Test point	Adjustment Item	Description
MTS INPUT LEVEL check	**Remote control unit**		**A02 : IN LEVEL**	1. Select 1.PICTURE / SOUND from SERVICE MENU. 2. Select the A02＜IN LEVEL＞ with FUNCTION (▲/▼) key. 3. Verify that the A02＜IN LEVEL＞ is set at its initial setting value.
MTS STEREO VCO adjustment	**TV audio multiplex signal generator** **Frequency counter** **Remote control unit**	**AUDIO OUT R output**	**A03 : FH MONITOR** **A04 :STEREO VCO**	1. Receive the RF signal (non-modulated sound signal) from the antenna terminal. 2. Select the A03＜FH MONITOR＞ with FUNCTION (▲/▼) key, and change the setting value from 0 to 1. 3. Connect the frequency counter to R output pin of the AUDIO OUT. 4. Select the A04＜STEREO VCO＞ with FUNCTION (▲/▼) key. 5. Set the initial setting value of the No.4 STEREO VCO with the FUNCTION (◀/▶) key. 6. Adjust the A04＜STEREO VCO＞ so that the frequency counter will display 15.73kHz±0.1kHz. * *The frequency counter indication should be stable.* 7. Select the A03＜FH MONITOR＞ with FUNCTION (▲/▼) key, and reset the setting value from 1 to 0.
MTS SAP VCO adjustment	**TV audio multiplex signal generator** **Frequency counter** **Remote control unit**	**S2 Connector 3-pin:GND 4-pin:SOA [RECEIVER PWB]** **AUDIO OUT R output**	**A09 : 5FH MON.** **A10 : SAP VCO**	1. Receive the RF signal (non-modulated sound signal) from the antenna terminal. 2. Connect between pin ④ of S2 connector and GND (pin ③ of S2 connector) through 1MΩ resistor. 3. Select the A09＜5FH MON＞ with FUNCTION (▲/▼) key, and reset the setting value from 0 to 1. 4. Connect the frequency counter to R output pin of the AUDIO OUT. 5. Select the A10＜SAP VCO＞ with FUNCTION (▲/▼) key. 6. Set the initial setting value of A10＜SAP VCO＞ with of FUNCTION (◀/▶) key. 7. Adjust the A10＜SAP VCO＞ so that the frequency counter will display 78.67kHz±0.5kHz. * *The frequency counter indication should be stable.* 8. Select the A09＜5FH MON＞ with FUNCTION (▲/▼) key, and reset the setting value from 1 to 0.
MTS FILTER check	**TV audio multiplex signal generator** **Oscilloscope** **Remote control unit**	**S2 Connector 2-pin:R [RECEIVER PWB]**	**A05 : PILOT** **A06 : FILTER**	1. Receive the RF signal (MTS pilot signal) from the antenna terminal. 2. Select the A05＜PILOT＞ with FUNCTION (▲/▼) key, and reset the setting value from 1 to 0. 3. Connect the oscilloscope to ② pin of S2 connector. 4. Select the A06＜FILTER＞ with FUNCTION (▲/▼) key. 5. Adjust the A06＜FILTER＞ so that the waveform will because minimum. 6. Select the A05＜PILOT＞ with FUNCTION (▲/▼) key, and reset the setting value from 1 to 0.

Item	Measuring Instrument	Test point	Adjustment Item	Description
MTS SEPARATION adjustment	**TV audio multiplex signal generator** **Oscilloscope** **Remote control unit**	**AUDIO OUT** **L output** **R output**	**A07 : LOW SEP.** **A08 : HI SEP.**	1. Input the stereo L signal (300Hz) from the TV audio multiplex signal generator to the antenna terminal. 2. Connect an oscilloscope to L OUTPUT pin of the AUDIO OUT, and display one cycle portion of the 300Hz signal. 3. Change the connection of the oscilloscope to R OUTPUT pin of the AUDIO OUT, and enlarge the voltage axis. 4. Select the A07＜LOW SEP.＞ with FUNCTION (▲/▼)key. 5. Set the initial setting value of the A07＜LOW SEP.＞ with the FUNCTION (◀/▶) key. 6. Adjust the A07＜LOW SEP.＞ so that the stroke element of the 300Hz signal will become minimum. 7. Change the signal to 3kHz, and similarly adjust the A08 ＜HI SEP.＞.

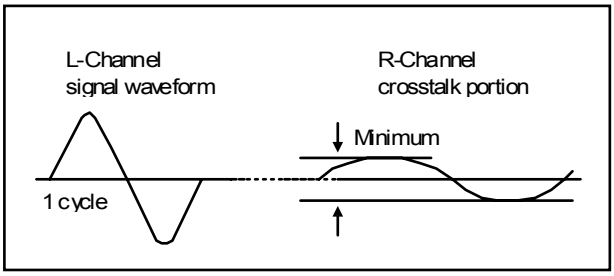

HOW TO CHECK THE HIGH VOLTAGE HOLD DOWN CIRCUIT

1. HIGH VOLTAGE HOLD DOWN CIRCUIT

After repairing the high voltage hold down circuit.
This circuit shall be checked to operate correctly.

2. CHECKING OF THE HIGH VOLTAGE HOLD DOWN CIRCUIT

(1) Turn the power switch ON.
(2) As shown in figure bellow, set the resistor (between **S2** connector **1** & **5**).
(3) Make sure that the screen picture disappears (no raster).
(4) Temporarily unplug the power cord.
(5) Remove the resistor (between **S2** connector **1** & **5**).
(6) Again plug the power cord, make sure that normal pictures is displayed on the screen.

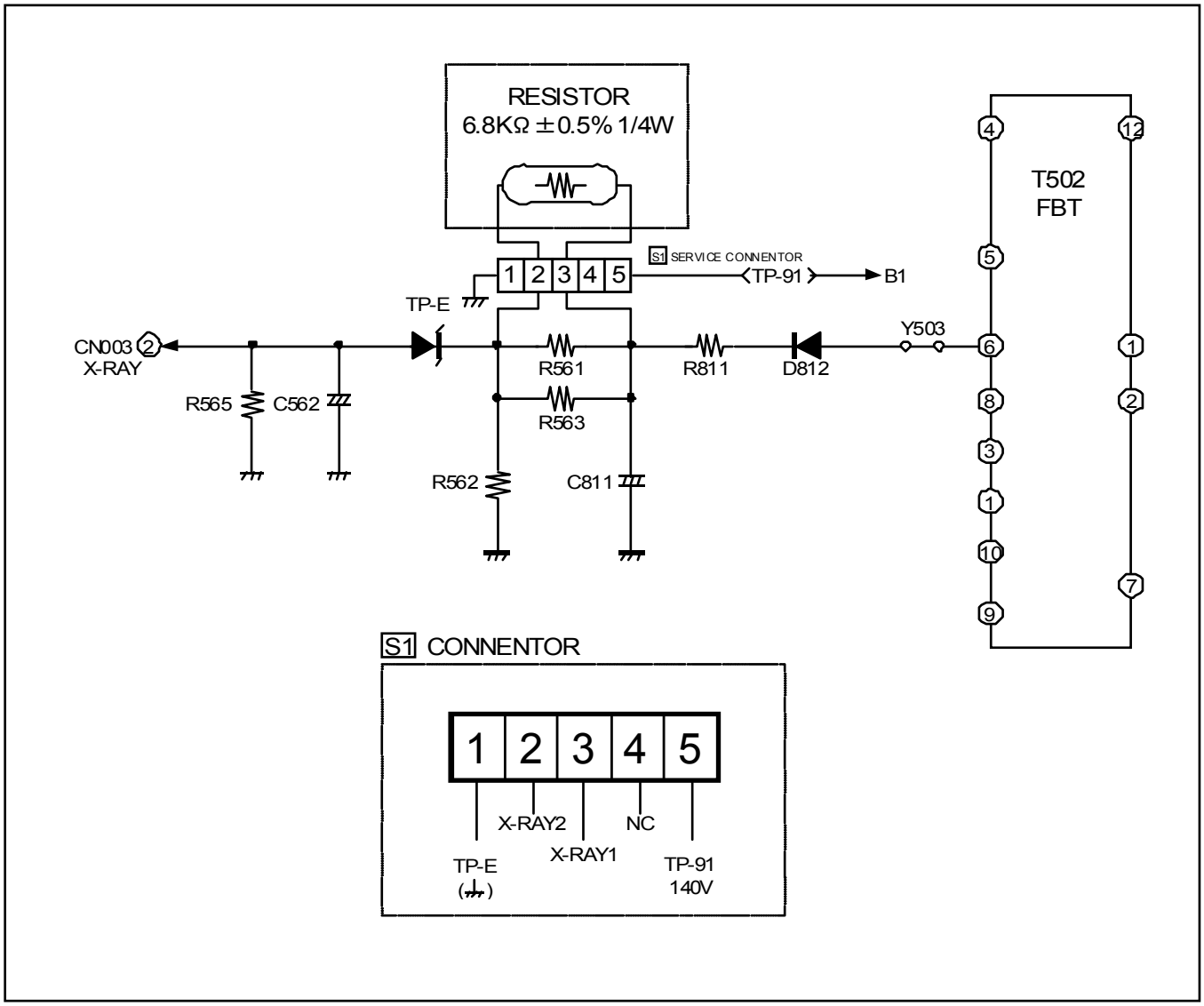

TROUBLESHOOTING

SELF CHECK FUNCTIONS

This model has self-check functions that inform of the failure of the TV by detecting abnormality. Operational state is always monitored and the identified is memorized on the record.

HOW TO ENTER THE SELF-CHECK MODE

1. During the stand-by mode, turn the power on while pressing the volume (▼) button on the TV set.

HOW TO EXIT FROM THE SELF-CHECK MODE

1. By using the remote control unit, turn the power off. At this time, the failure record is cleared.
2. Take off the AC plug from the wall outlet. At this time, the failure record is not cleared.

SELF-CHECK DISPLAY

The self-check results are shown on the following display.
Method of indication when the raster is not displayed (Fig.1).

Each failure is shown by turning POWER LED on and off at specified intervals.

Item	POWER LED ON / OFF intervals
X-ray protection	Turning on and off 0.1-second intervals
B1 Over-current protection	Turning on and off 1-second intervals
Low B short protection	Turning on and off 2-second intervals

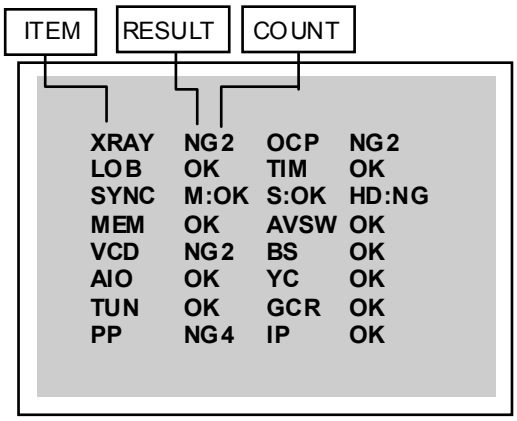

Fig. 1 SELF-CHECK SCREEN

EXPLANATION FOR ACTIVATION OF SELF-CHECK FUNCTIONS

- For X-ray protection, B1 over-current protection and low B short protection, the power of the TV is turned off if NG is detected.
  Immediately after the power is turned off, POWER LED will be turning on and off.
  When the power is turned off, you cannot turn the power on again until the AC plug is taken out and put in again.
- The latest failure is stored on the record at the end.
  The failure record for each check item is counted to the number of 9 at the maximum, When more than 9 failures are stored on the record, the counter remains stopped at 9.
- Because of the timing of Vcc start-up and shut-down of the IC connecting to the I^2C bus during which the power is turned on and off, the operation may be interpreted as an error.
  In order to avoid the misinterpretation, the self-check functions should be started at about 3 seconds after the power is turned on.

Indication	Check item	Details of detection	Method of detection
XRAY	X-ray radiation protection	Operation of X-ray protection circuit.	At about 3 seconds after the power is turned on, the self-check function starts. If NG is detected for 200ms, the power is turned off automatically.
OCP	B1 over-current protection	An B1 over-current is detected.	At about 3 seconds after the power is turned on, the self-check function starts. If NG is detected for 200ms, the power is turned off automatically.
LOB	Low B short protection	Operation of low B short protection circuit.	At about 3 seconds after the power is turned on, the self-check function starts. If NG is detected for 200ms, the power is turned off automatically.
TIM	Timer	The AC power frequency is changed as follows : 50Hz→60Hz 60Hz→50Hz	Periodically check the power frequency by counting the AC pulse and monitor whether or not the frequency is changed except for the time immediately after resetting.
SYNC	Presence or absence of synchronized signal	Presence of synchronized signal. HD : HD signal M : NTSC main signal S : NTSC sub signal * AN5392FBQ	When entering the self-check mode, "OK" is shown. While running the mode with picture signal, if the synchronized signal is disappeared, "NG" is shown.
MEM	Memory (EEP-ROM)	ACK is returned when I^2C traffic is carried out.	The state is monitored every time when I^2C traffic is carried out. Then the state is counted as a failure if ACK is not returned.
AVSW	AV switch	Ditto MM1519XQ and CXA2069Q	Ditto
VCD	Video / chroma process (RGB process)	Ditto AN5392FBQ	Ditto
BS	Broadcast satellite tuner	Not used	
AIO	Audio process (MTS decode / audio control)	Ditto UPC1851BCU	Ditto
YC	3D YC separation	Ditto UPD64083GF	Ditto
TUN	RF tuner	Ditto Main & sub RF tuner	Ditto
GCR	Ghost reduction	Not used	
PP	Picture & Picture (Multi-screen)	Ditto TMS57128GJG	Ditto
IP	I-P conversion (DSD : enhancer)	Ditto JCC5054	Ditto